Service Manual

NA7004 /N1B/N1SG
U1B/K1B

Network Audio Player

NA7004

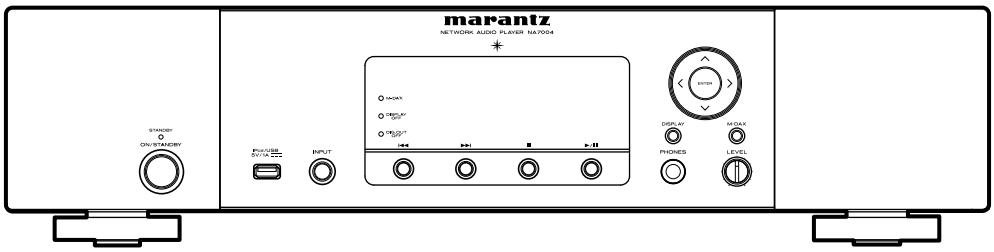

- For purposes of improvement, specifications and design are subject to change without notice.
- Please use this service manual with referring to the operating instructions without fail.
- Some illustrations using in this service manual are slightly different from the actual set.

marantz®

NA7004

Ver. 2
Please refer to the MODIFICATION NOTICE.

S0162-1V02DM/DG1010

MARANTZ DESIGN AND SERVICE

Using superior design and selected high grade components, **MARANTZ** company has created the ultimate in stereo sound. Only original **MARANTZ** parts can insure that your **MARANTZ** product will continue to perform to the specifications for which it is famous.

Parts for your **MARANTZ** equipment are generally available to our National Marantz Subsidiary or Agent.

ORDERING PARTS :

Parts can be ordered either by mail or by Fax.. In both cases, the correct part number has to be specified.

The following information must be supplied to eliminate delays in processing your order :

1. Complete address
2. Complete part numbers and quantities required
3. Description of parts
4. Model number for which part is required
5. Way of shipment
6. Signature : any order form or Fax. must be signed, otherwise such part order will be considered as null and void.

USA

MARANTZ AMERICA, INC
100 CORPORATE DRIVE
MAHWAH, NEW JERSEY 07430
USA

EUROPE / TRADING

D&M EUROPE B. V.
P. O. BOX 8744, BUILDING SILVERPOINT
BEEMDSTRAAT 11, 5653 MA EINDHOVEN
THE NETHERLANDS
PHONE : +31 - 40 - 2507844
FAX : +31 - 40 - 2507860

CANADA

D&M Canada Inc.
5-505 APPLE CREEK BLVD.
MARKHAM, ONTARIO L3R 5B1
CANADA
PHONE : 905 - 415 - 9292
FAX : 905 - 475 - 4159

JAPAN

D&M Holdings Inc.
D&M BUILDING, 2-1 NISSHIN-CHO,
KAWASAKI-KU, KAWASAKI-SHI,
KANAGAWA, 210-8569 JAPAN

株式会社 ディーアンドエムホールディングス

本 社 〒210-8569
神奈川県川崎市川崎区日進町2-1 D&Mビル

KOREA

D&M SALES AND MARKETING KOREA LTD.
2F,YEON BLDG.,
88-5, BANPO-DONG, SEOCHO-GU,
SEOUL KOREA
PHONE : +82 - 2 - 715 - 9041
FAX : +82 - 2 - 715 - 9040

CHINA

D&M SALES AND MARKETING SHANGHAI LTD.
ROOM.808 SHANGHAI AIRPORT CITY TERMINAL
NO.1600 NANJING (WEST) ROAD, SHANGHAI,
CHINA. 200040
TEL : 021 - 6248 - 5151
FAX : 021 - 6248 - 4434

NOTE ON SAFETY :

Symbol ⚠ Fire or electrical shock hazard. Only original parts should be used to replaced any part marked with symbol ⚠.

Any other component substitution (other than original type), may increase risk of fire or electrical shock hazard.

安全上の注意：

⚠がついている部品は、安全上重要な部品です。必ず指定されている部品番号のものを使用して下さい。

SHOCK, FIRE HAZARD SERVICE TEST :

CAUTION : After servicing this appliance and prior to returning to customer, measure the resistance between either primary AC cord connector pins (with unit NOT connected to AC mains and its Power switch ON), and the face or Front Panel of product and controls and chassis bottom.

Any resistance measurement less than 1 Megohms should cause unit to be repaired or corrected before AC power is applied, and verified before it is return to the user/customer.

Ref. UL Standard No. 60065.

In case of difficulties, do not hesitate to contact the Technical Department at above mentioned address.

091105DM/DG

SAFETY PRECAUTIONS

The following check should be performed for the continued protection of the customer and service technician.

LEAKAGE CURRENT CHECK

Before returning the unit to the customer, make sure you make either (1) a leakage current check or (2) a line to chassis resistance check. if the leakage current exceeds 0.5 milliamps, or if the resistance from chassis to either side of the power cord is less than 460 kohms, the unit is defective.
Be sure to test for leakage current with the AC plug in both polarities, in addition, in each power ON, OFF and STANDBY mode, if applicable.

CAUTION Please heed the points listed below during servicing and inspection.

◎ Heed the cautions!

Spots requiring particular attention when servicing, such as the cabinet, parts, chassis,etc., have cautions indicated on labels. be sure to heed these causions and the cautions indicated in the handling instructions.

◎ Caution concerning electric shock!

(1) An AC voltage is impressed on this set, so touching internal metal parts when the set is energized could cause electric shock. Take care to avoid electric shock, by for example using an isolating transformer and gloves when servicing while the set is energized, unplugging the power cord when replacing parts, etc.

(2) Tere are high voltage parts inside. Handle with extra care when the set is energized.

◎ Caution concerning disassembly and assembly!

Through great care is taken when manufacturing parts from sheet metal, there may in some rare cases be burrs on the edges of parts which could cause injury if fingers are moved across them. Use gloves to protect your hands.

◎ Only use designated parts!

The set's parts have specific safety properties (fire resistance, voltage resistance, etc.). For replacement parts, be sure to use parts which have the same poroperties. In particular, for the important safety parts that are marked ⚠ on wiring diagrams and parts lists, be sure to use the designated parts.

◎ Be sure to mount parts and arrange the wires as they were originally!

For safety seasons, some parts use tape, tubes or other insulating materials, and some parts are mounted away from the surface of printed circuit boards. Care is also taken with the positions of the wores omsode amd clamps are used to keep wires away from heating and high voltage parts, so be sure to set everything back as it was originally.

◎ Inspect for safety after servicing!

Check that all screws, parts and wires removed or disconnected for servicing have been put back in their original positions, inspect that no parts around the area that has been serviced have been negatively affected, conduct an inslation check on the external metal connectors and between the blades of the power plug, and otherwise check that safety is ensured.

(Insulation check procedure)
Unplug the power cord from the power outlet, disconnect the antenna, plugs, etc., and turn the power switch on. Using a 500V insulation resistance tester, check that the inplug and the externally exposed metal parts (antenna terminal, headphones terminal, input terminal, etc.) is 1MΩ or greater. If it is less, the set must be inspected and repaired.

CAUTION Concerning important safety parts

Many of the electric and structural parts used in the set have special safety properties. In most cases these properties are difficult to distinguish by sight, and using replacement parts with higher ratings (rated power and withstand voltage) does not necessarily guarantee that safety performance will be poreserved. Parts with safety properties are indicated as shown below on the wiring diagrams and parts lists is this service manual. Be sure to replace them with parts with the designated part number.

(1) Schematic diagrams .....Indicated by the ⚠ mark.
(2) Parts lists .....Indicated by the ⚠ mark.
Using parts other than the designated parts could result in electric shock, fires or other dangerous situations.

NOTE FOR SCHEMATIC DIAGRAM

WARNING:

Parts marked with this symbol ⚠ have critical characteristics. Use ONLY replacement parts recommended by the manufacturer.

CAUTION:

Before returning the unit to the customer, make sure you make either (1) a leakage current check or (2) a line to chassis resistance check. If the leakage current exceeds 0.5 milliamps, or if the resistance from chassis to either side of the power cord is less than 460 kohms, the unit is defective.

WARNING:

DO NOT return the unit to the customer until the problem is located and corrected.

NOTICE:

ALL RESISTANCE VALUES IN OHM. k=1,000 OHM / M=1,000,000 OHM
ALL CAPACITANCE VALUES IN MICRO FARAD. P=MICRO-MICRO FARAD EACH VOLTAGE AND CURRENT ARE MEASURED AT NO SIGNAL INPUT CONDITION. CIRCUIT AND PARTS ARE SUBJECT TO CHANGE WITHOUT PRIOR NOTICE.

NOTE FOR PARTS LIST

PARTS INFORMATION

RESISTORS

1) 00MGD05 × × × 140, Carbon film fixed resistor, ±5% 1/4W
2) 00MGD05 ××× 160, Carbon film fixed resistor, ±5% 1/6W
① ——— Resistance value

Examples ;
① Resistance value

0.1Ω.....001	10Ω.....100	1kΩ.....102	100kΩ.....104
0.5Ω.....005	18Ω.....180	2.7kΩ.....272	680kΩ.....684
1Ω.....010	100Ω.....101	10kΩ.....103	1MΩ.....105
6.8Ω.....068	390Ω.....391	22kΩ.....223	4.7MΩ.....475

Note : Please distinguish 1/4W from 1/6W by the shape of parts used actually.

CAPACITORS

CERAMIC CAP.
3) 00MDD1 × ××× 370, Ceramic capacitor
② ③ Disc type
Temp.coeff.P350 ～ N1000, 50V
③ ——— Capacity value
② ——— Tolerance

Examples ;
② Tolerance (Capacity deviation)
±0.25pF..... 0
±0.5pF..... 1
±5%..... 5
✻Tolerance of COMMON PARTS handled here are as follows :
0.5pF ～ 5pF.....±0.25pF
6pF ～ 10pF.....±0.5pF
12pF ～ 560pF.....±5%
③ Capacity value

0.5pF.....005	3pF.....030	100pF.....101
1pF.....010	10pF.....100	220pF.....221
1.5pF.....015	47pF.....470	560pF.....561

CERAMIC CAP.
4) 00MDK16 ××× 300, High dielectric constant ceramic capacitor
④ Disc type
Temp.chara. 2B4, 50V
④ ——— Capacity value

Examples ;
④ Capacity value

100pF.....101	1000pF..... 102	10000pF.....103
470pF.....471	2200pF..... 222	

ELECTROLY CAP. (⧺)
5) 00MEA ××××××10, Electrolytic capacitor
⑤ ⑥ One-way lead type, Tolerance ±20%
⑥ ——— Working voltage
⑤ ——— Capacity value

Examples ;
⑤ Capacity value

0.1μF.....104	4.7μF.....475	100μF ... 107
0.33μF.....334	10μF.....106	330μF ... 337
1μF.....105	22μF.....226	1100μF ... 118
		2200μF ... 228

⑥ Working voltage

6.3V.....006	25V.....025
10V.....010	35V.....035
16V.....016	50V.....050

FILM CAP. (⧦)
6) 00MDF15 × ××350 → Plastic film capacitor
00MDF15 × ××310 One-way type, Mylar ±5% 50V
00MDF16 ××× 310 → Plastic film capacitor
⑦ One-way type, Mylar ±10% 50V
⑦ ——— Capacity value

Examples ;
⑦ Capacity value

0.001μF (1000pF) 102	0.1μF 104
0.0018μF.....182	0.56μF 564
0.01μF.....103	1μF 105
0.015μF.....153	

NOTE ON SAFETY FOR FUSIBLE RESISTOR :

The suppliers and their type numbers of fusible resistors are as follows;

1. KOA Corporation

Part No. (MJI)	Type No. (KOA)	Description
00MNH05 × ×× 140	→ RF25S × ××× ΩJ	(±5% 1/4W)
00MNH05 × ×× 120	→ RF50S × ××× ΩJ	(±5% 1/2W)
00MNH85 × ×× 110	→ RF73B2A × ××× ΩJ	(±5% 1/10W)
00MNH95 ××× 140	→ RF73B2E ××× ΩJ	(±5% 1/4W)

✻ Resistance value
Resistance value (0.1 – 10kΩ)

2. Matsushita Electronic Components Co., Ltd

Part No. (MJI)	Type No. (MEC)	Description
00MNF05 × ×× 140	→ ERD-2FCJ ×××	(±5% 1/4W)
00MRF05 × ×× 140		
00MNF02 × ×× 140	→ ERD-2FCG ×××	(±2% 1/4W)
00MRF02 ××× 140		

✻ Resistance value
✻ Resistance value

Examples ;
✻ Resistance value

0.1Ω.....001	10Ω.....100	1kΩ.....102	100kΩ.....104
0.5Ω.....005	18Ω.....180	2.7kΩ.....272	680kΩ.....684
1Ω.....010	100Ω.....101	10kΩ.....103	1MΩ.....105
6.8Ω.....068	390Ω.....391	22kΩ.....223	4.7MΩ.....475

ABBREVIATION AND MARKS			
ANT.	: ANTENNA	BATT.	: BATTERY
CAP.	: CAPACITOR	CER.	: CERAMIC
CONN.	: CONNECTING	DIG.	: DIGITAL
HP	: HEADPHONE	MIC.	: MICROPHONE
μ-PRO	: MICROPROCESSOR	REC.	: RECORDING
RES.	: RESISTOR	SPK	: SPEAKER
SW	: SWITCH	TRANSF.	: TRANSFORMER
TRIM.	: TRIMMING	TRS.	: TRAMSISTOR
VAR.	: VARIABLE	X'TAL	: CRYSTAL

NOTE ON FUSE :

Regarding to all parts of parts code **00MFS20xxx2xx,** replace only with Wickmann-Werke GmbH, Type 372 non glass type fuse.

NOTE ON SAFETY :

Symbol ⚠ Fire or electrical shock hazard. Only original parts should be used to replaced any part marked with symbol ⚠. Any other component substitution (other than original type), may increase risk of fire or electrical shock hazard.

安全上の注意：

⚠ がついている部品は、安全上重要な部品です。必ず指定されている部品番号の部品を使用して下さい。

060522 MZ

SPECIFICATIONS

❑ Audio section

• Analog output

Channels	2 channels
Playable frequency range	2 Hz – 96 kHz
Playable frequency response	2 Hz – 50 kHz (–3dB) (Sampling frequency: 192 kHz) 2 Hz – 20 kHz (Sampling frequency: 44.1 kHz)
S/N	110 dB (Audible Range)
Dynamic Range	110 dB (Audible Range)
Harmonic Distortion	0.001 % (1 kHz, Audible Range)

• Output Level

Unbalanced	2.35V RMS Stereo
Headphone output	18mW/33Ω (variable maximum)

• Digital output

Output level (cinch JACK)	0.5 Vp-p
Output level (optical)	–19 dBm

• Digital input

Signal format	DIGITAL AUDIO INTERFACE] (linear PCM)
Input level (cinch JACK)	0.5 Vp-p
Input level (optical)	–27 dBm or later
Emission wavelength (optical)	660 nm

❑ Tuner section (for N model)

• FM tuner

Range of receivable frequencies	87.5 to 108.0 MHz
S/N ratio (mono)	65 dB
Sensitivity (S/N 30 dB)	9 dBμV (IHF)

• AM tuner

Range of receivable frequencies	522 to 1611 kHz
S/N ratio	40 dB
Sensitivity (S/N 20 dB)	55 dBμV/m

❑ DAB tuner section (for N model)

Frequency range	174.928 (5A) ~ 239.200 (13F) MHz (BAND Ⅲ)
Sensitivity	–90 dBm
Signal-to-noise ratio	95 dB
THD+N	0.025 % (1 kHz)
Channel separation	70 dB (1 kHz)

❑ Power supply

Power supply voltage/frequency	AC 230 V, 50/60 Hz (for N model) AC 120 V, 60 Hz (for U model) AC 220 V, 50 Hz (for K model)
Power consumption	30W
Power consumption in standby mode	0.4 W

❑ General

External dimensions (width x height x depth)	440 x 106 x 354 mm (for N model) 440 x 106 x 343 mm (for U,K model)
Weight	6.5 kg

DIMENSION

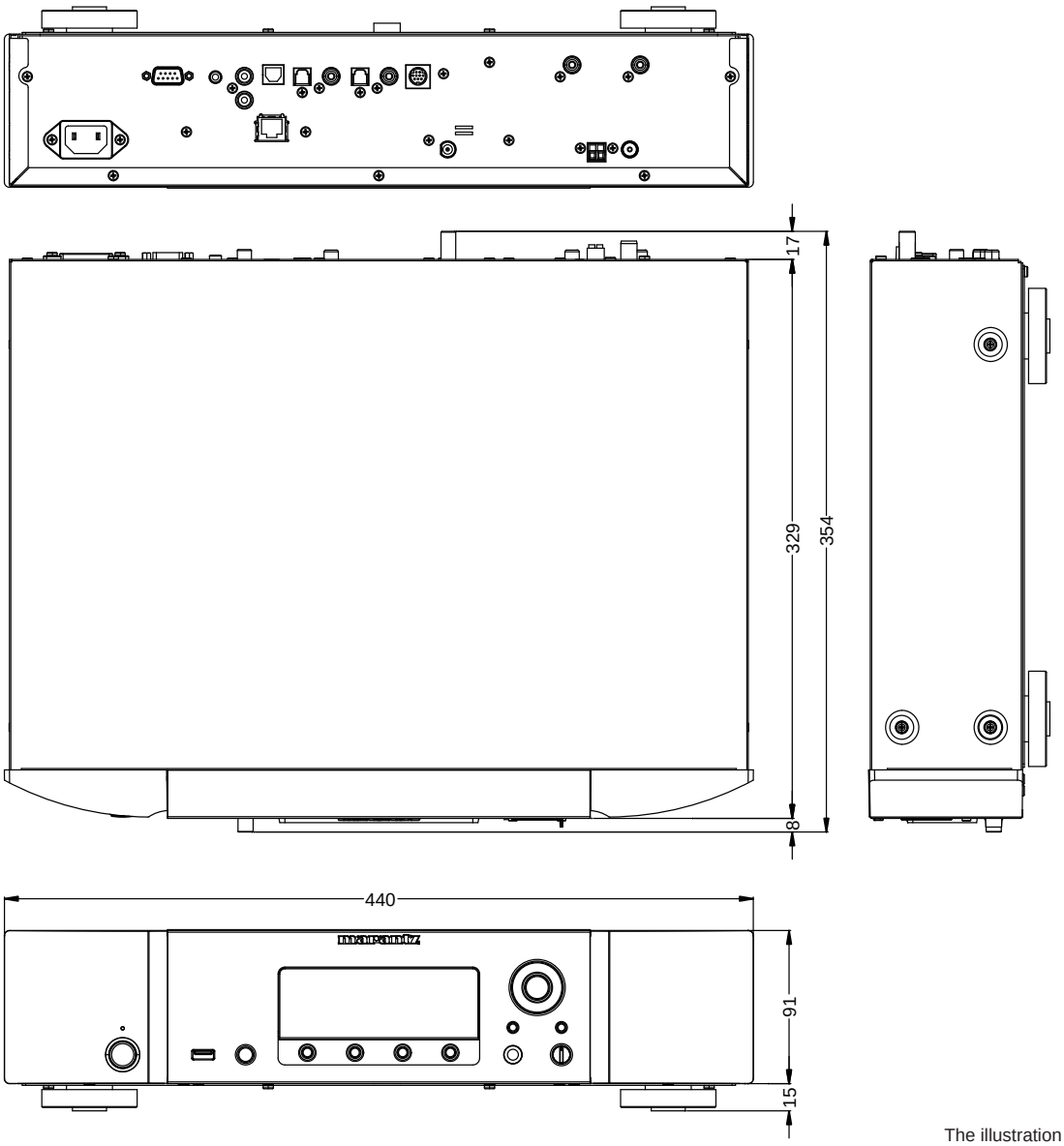

The illustration is N model.

CAUTION IN SERVICING

Firmware update

- When you replace the IC912, you need software updates.
  Refer to "After replacing IC912".
- When you replace the ETHERNET PWB, you need software updates. And MAC Address seal replacement is required.
  Refer to "After replacing ETHERNET PWB Assy".

Initializing Network Audio Player (Factory Rerset)

Network Audio Player initialization should be performed when the µcom, peripheral parts of µcom, and ETHERNET PWB. are replaced.

1. Turn off the power using ON/STANDBY button, unplug the power cord.
2. Plug the power cord into a power outlet while pressing CURSOR ▼ and M-DAX button simultaneously.
   ∗ Initialize.

Note: •All user settings will be lost and this factory setting will be recovered when this initialization mode.
So make sure to memorize your setting for restoring after the initialization.

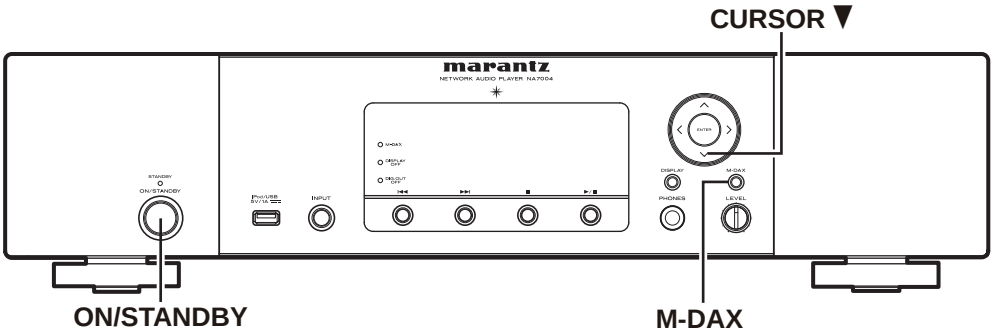

DISASSEMBLY

- Disassemble in order of the arrow of the figure of following flow.
- In the case of the re-assembling, assemble it in order of the reverse of the following flow.
- In the case of the re-assembling, observe "attention of assembling" it.
- If wire bundles are untied or moved to perform adjustment or parts replacement etc., be sure to rearrange them neatly as they were originally bundled or placed afterward.
  Otherwise, incorrect arrangement can be a cause of noise generation.

TOP COVER

FRONT PANEL ASSY
Refer to **"DISASSEMBLY 1. FRONT PANEL ASSY"** and **"EXPLODED VIEW"**
PHONE PCB ASS'Y
(Ref. No. of EXPLODED VIEW : P1)
USB PCB ASS'Y
(Ref. No. of EXPLODED VIEW : P2)
STANDBY PCB ASS'Y
(Ref. No. of EXPLODED VIEW : P3)
DISPLAY PCB ASS'Y
(Ref. No. of EXPLODED VIEW : P4)

ETHERNET PCB ASS'Y
Refer to **"DISASSEMBLY 2. ETHERNET PCB ASS'Y "** and **"EXPLODED VIEW"**
ETHERNET PCB ASS'Y
(Ref. No. of EXPLODED VIEW : P9)

MAIN PCB ASS'Y
Refer to **"DISASSEMBLY 4. MAIN PCB ASS'Y"** and **"EXPLODED VIEW"**
MAIN PCB ASS'Y
(Ref. No. of EXPLODED VIEW : P6)

TUNER MODULE & DAB PCB ASS'Y (N model only)
Refer to **"DISASSEMBLY 3. TUNER MODULE"** and **"EXPLODED VIEW"**
DAB PCB ASS'Y
(Ref. No. of EXPLODED VIEW : P7)
TUNER MODULE
(Ref. No. of EXPLODED VIEW : P8)

AUDIO PCB ASSY
Refer to **"DISASSEMBLY 5. AUDIO PCB ASSY"** and **"EXPLODED VIEW"**
AUDIO PCB ASSY
(Ref. No. of EXPLODED VIEW : P5)

About the photos used for descriptions in the DISASSEMBLY" section.

- The direction from which the photographs used herein were photographed is indicated at "Direction of photograph: ***" at the left of the respective photographs.
- Refer to the table below for a description of the direction in which the photos were taken.
- Photographs for which no direction is indicated were taken from above the product.
- The photograph is NA7004 N1SG model.

The viewpoint of each photograph (Photografy direction)

[View from above]

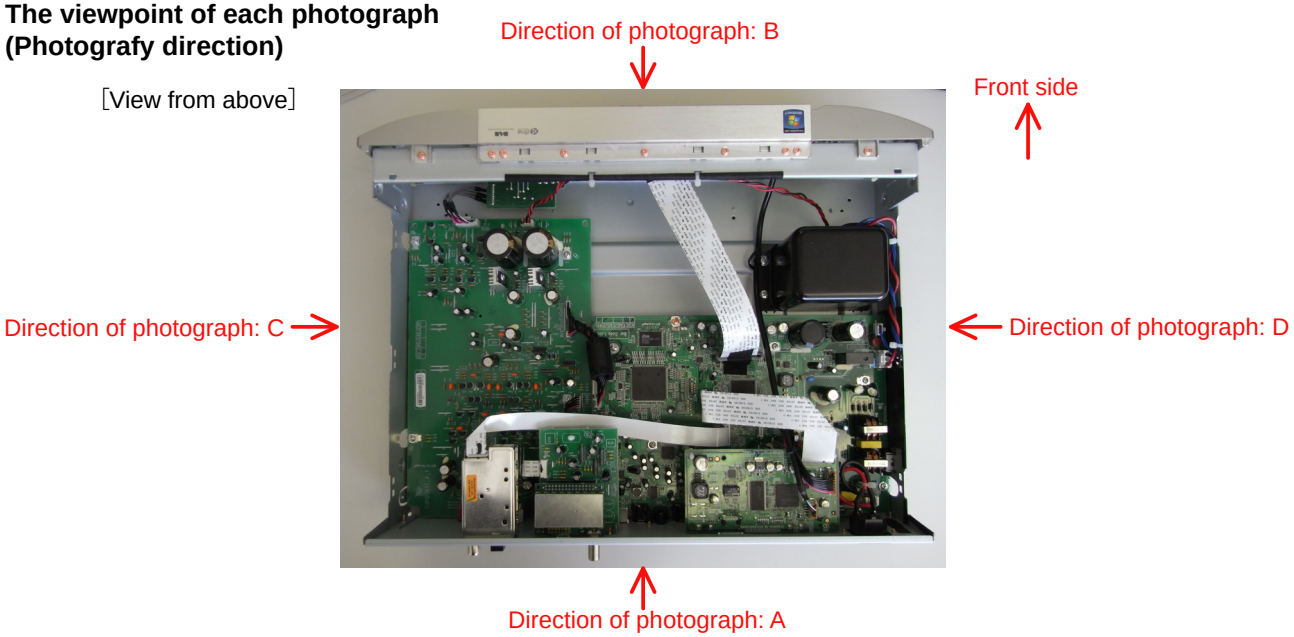

1. FRONT PANEL ASSY

Proceeding : TOP COVER → FRONT PANEL ASSY

(1) Remove the screws.

View from bottom

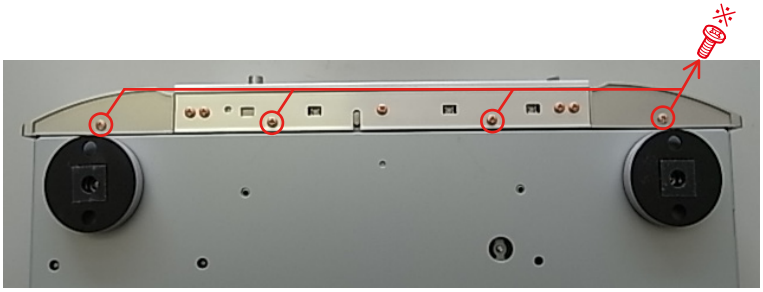

(2) Remove the screws.

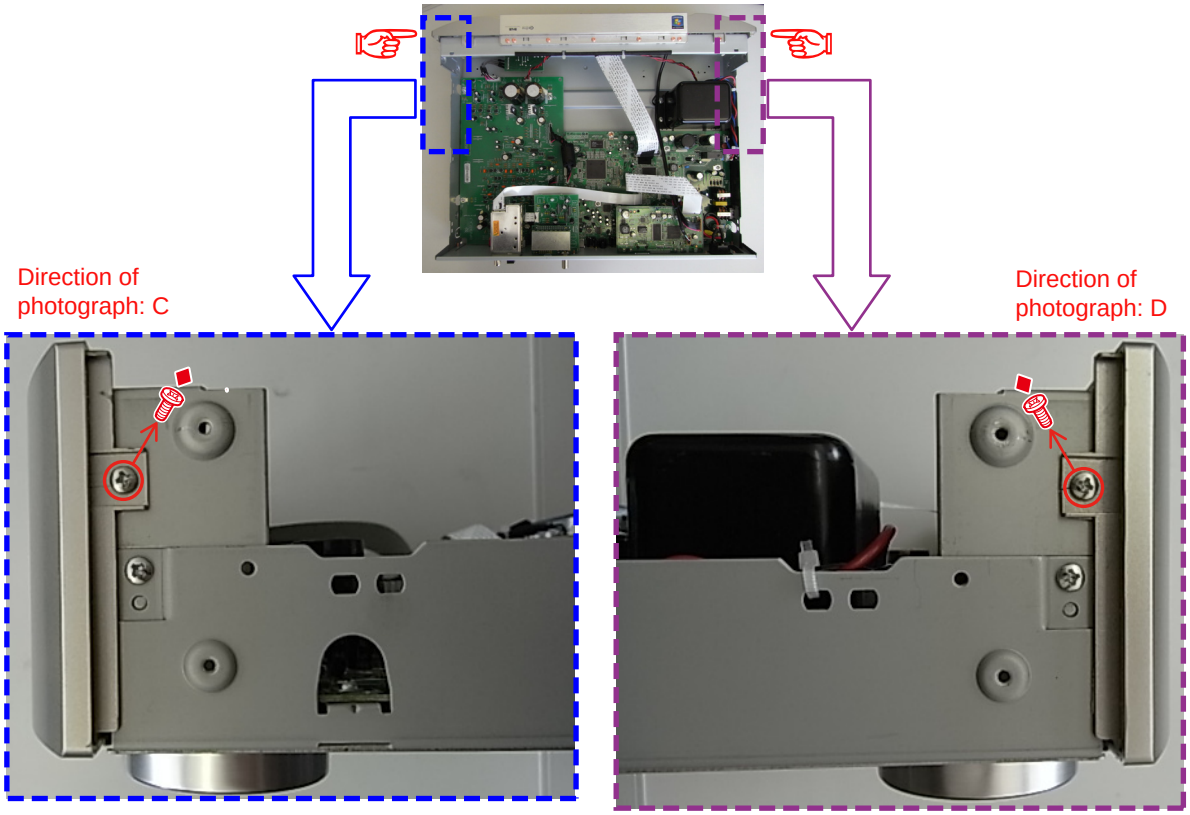

(3) Cut the wire clamp band, then disconnect the connector wires and FFC cable. Remove the screws.

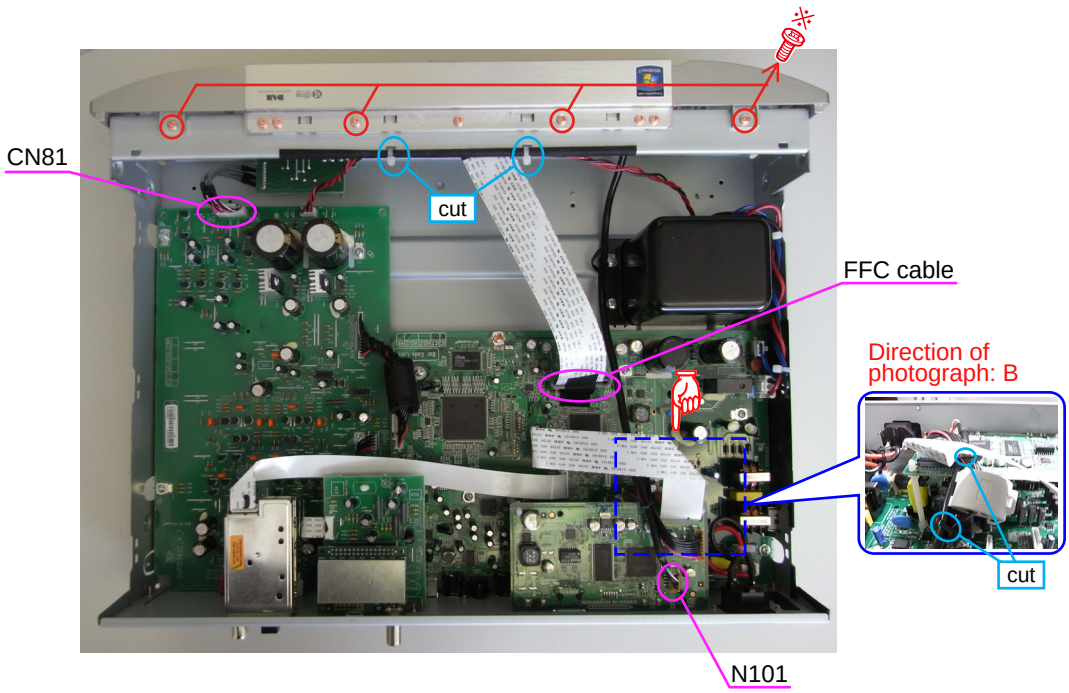

Please refer to "EXPLODED VIEW" for the disassembly method of each P.W.B included in FRONT PANEL ASSY.

2. ETHERNET PCB ASS'Y

Proceeding : TOP COVER → ETHERNET PCB ASS'Y

(1) Remove the screws.

Direction of photograph: A

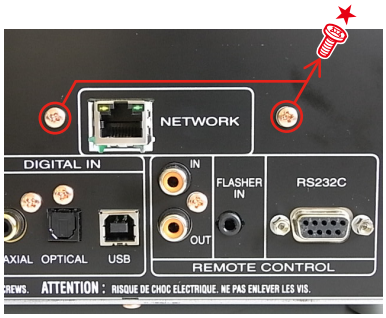

(2) Disconnect the connector wires and FFC cable, then remove the PWB Clamper.

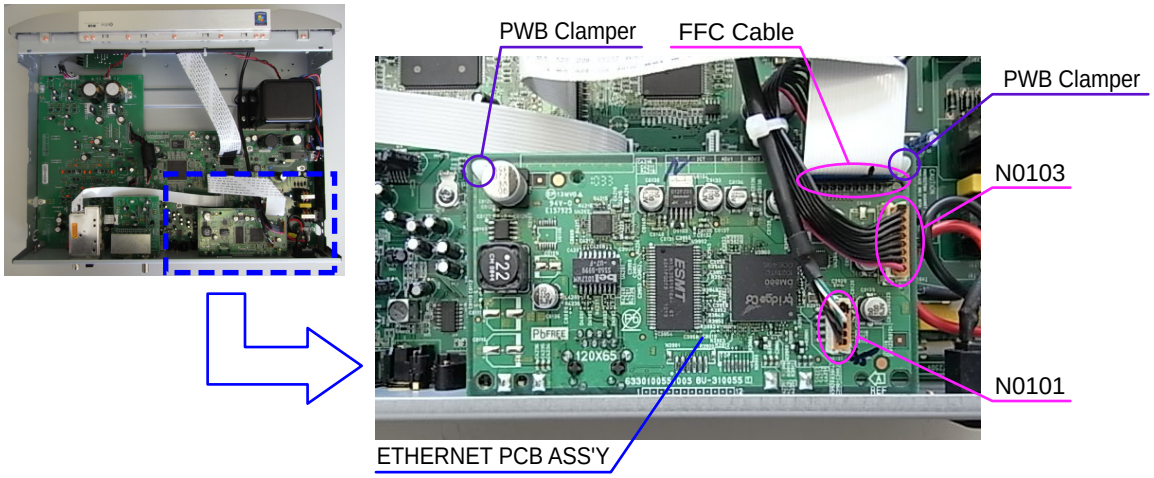

3. TUNER MODULE & DAB PCB ASS'Y (N model only)

Proceeding : TOP COVER → TUNER MODULE & DAB PCB ASS'Y (N model omly)

(1) Remove the screws and NUT.

Direction of photograph: A

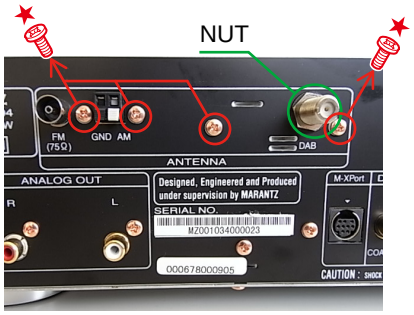

(2) Disconnect the FFC cable, then remove the PWB Clamper.

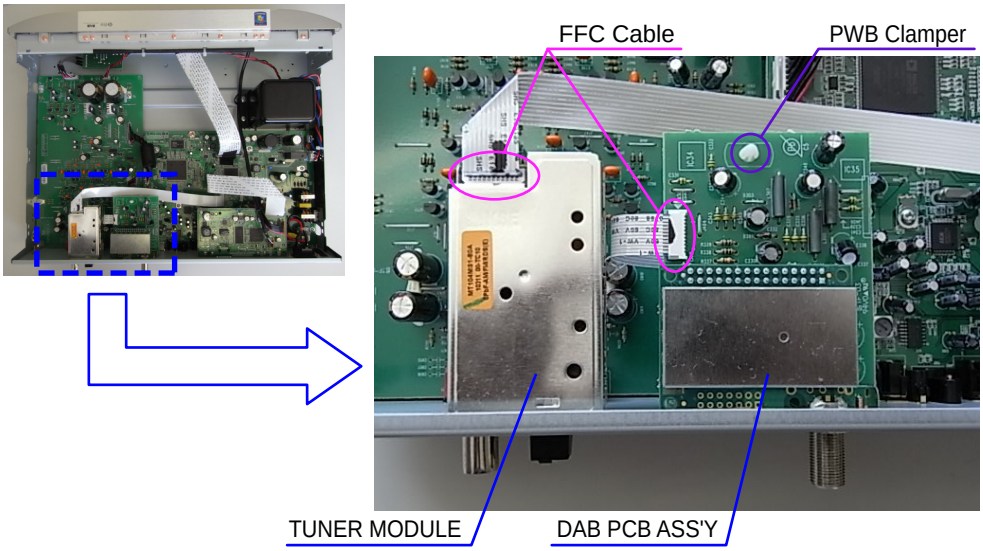

4. MAIN PCB ASS'Y

Proceeding : TOP COVER → ETHERNET PCB ASS'Y → MAIN PCB ASS'Y

(1) Remove the screws and NUT.

Direction of photograph: A

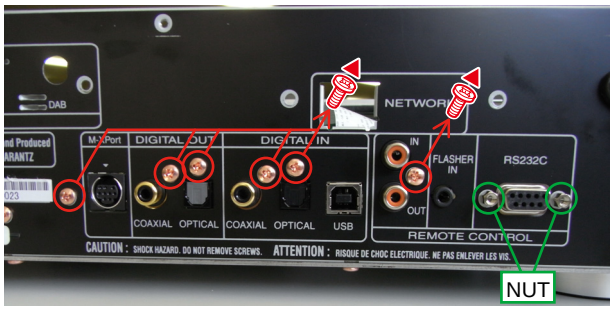

(2) Disconnect the connector wires and FFC cable, then remove the screws.

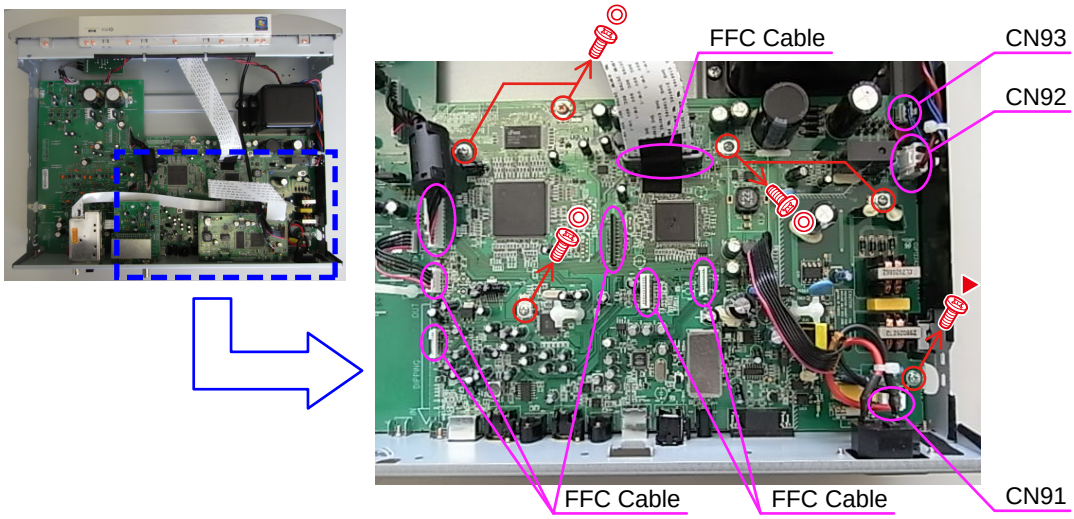

5. AUDIO PCB ASSY

Proceeding : TOP COVER → TUNER MODULE & DAB PCB ASS'Y (N model omly) → AUDIO PCB ASS'Y

(1) Remove the screws.

Direction of photograph: A

(2) Disconnect the FFC cable, then remove the screws

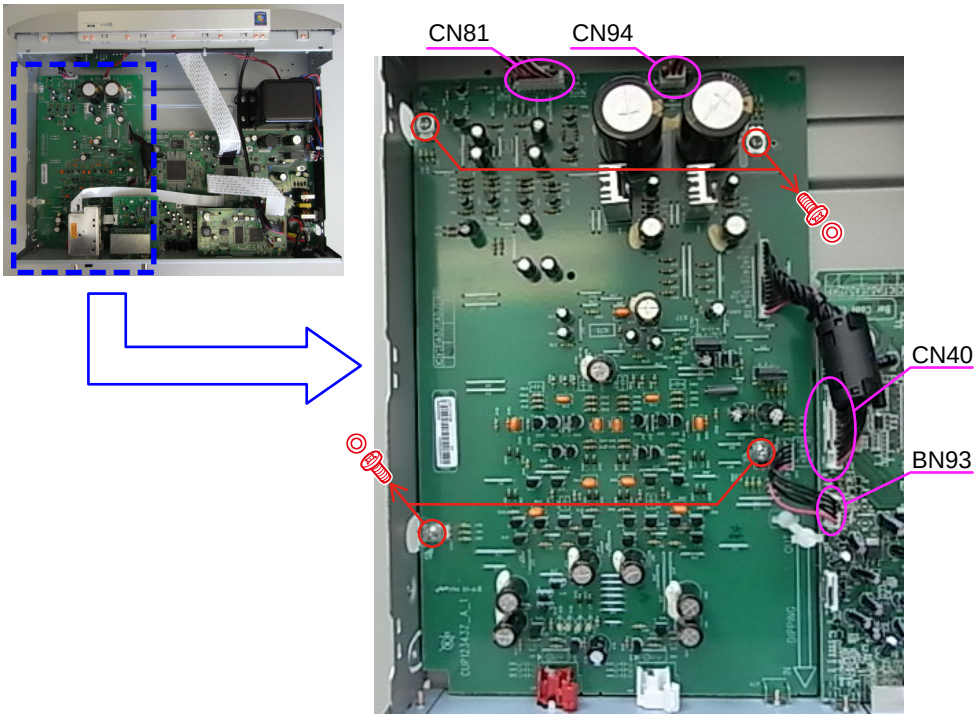

SPECIAL MODE

Special mode setting

Plug AC cord into power outlet while pressing buttons A and B.

Each button continue to press until the turning on STANDBY LED.

No.	Mode	Button A	Button B	Contents
1	Initialization mode (Factory Reset)	CURSOR DOWN	M-DAX	Initializing. Factory Reset
2	Initialization mode (User Reset)	DISPLAY	M-DAX	Initializing. (Contents User's Guide is published)
3	Version display	CURSOR UP	-	Version Display
4	Product mode 1	STOP	REVERSE-SKIP	Factory use.
5	Prodcut mode 2	CURSOR LEFT	M-DAX	Factory use.
6	Protection history mode	REVERSE-SKIP	FORWARD-SKIP	Protection history view and reset
7	DPMS update mode	DISPLAY	CURSOR UP	DPMS Up date Mode
8	Update mode (by RS232C)	DISPLAY	ENTER	Development/Fuctory use. The details cannot be disclosed.
9	MAC Address rewrite mode	DISPLAY	CURSOR RIGHT	Development/Fuctory use. The details cannot be disclosed.
10	Access to development server mode	DISPLAY	CURSOR RIGHT	Development/Fuctory use. The details cannot be disclosed.

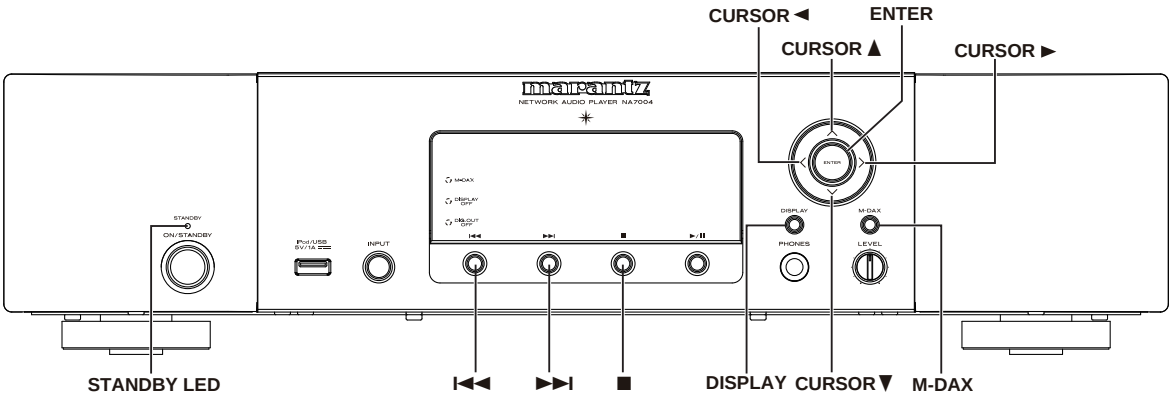

1. Initialization mode (Factory Reset)

Backup data initialization is carried out. Refer to Initialization Items.

After initialization, move on to nomal mode.

CAUTION

Version information (such as rewriting failed log) Clear.

Clear the history of protection.

Startup display

All lights display(2 seconds) - All off display(2 seconds)
"Factory Reset" displayed for 5 seconds.

Initialization Items (Default setting)

	Default
source	Internet Radio
TUNER(band)	FM
DIMMER	100%
TUNER Preset	Clear all
Favorite list	Clear all
iPod mode	Direct mode
AUTO STANDBY	OFF
DAB Module	Module Initialization
Protection history	NO PROTECT
Network setting	DHCP (On)
PC Language	English
Screen Saver	Off
IR Setting	Enable

2. Initialization mode (User Reset)

Backup data initialization is carried out. Refer to Initialization Items.

After initialization, move on to nomal mode.

CAUTION

The difference is the following two points.

Version information (such as rewriting failed log) not cleared.

History of protection not cleard.

Startup display

"Initialized" displayed for 5 seconds.

3. Version display

Menu items appear in the Add Version.Otherwise, normal operation.

To exit this mode, unplug the power cord.

Startup display

"Version" displayed for 5 seconds.

How to Display Version

Select the Menu, and press ENTER button.

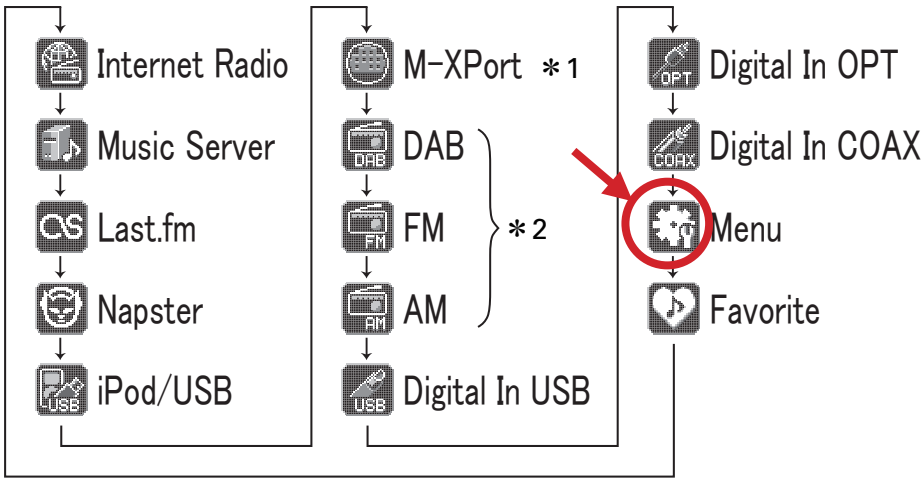

＊1 The icon is not displayed when you do not connect RX101 sold separately.

＊2 Only N

Pressing the ENTER button will be displayed below.

Press Cursor ►

The version of the system-µ Processor.

Press Cursor ▼

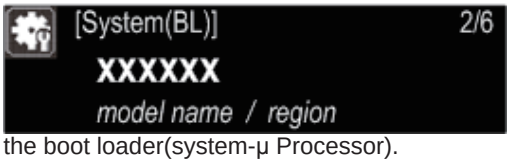

The version of the boot loader(system-µ Processor).

Press Cursor ▼

The version of the display-µ Processor.

Press Cursor ▼

The version of the boot loader(network-µ Processor).

Press Cursor ▼

The version of the image(network-µ Processor).

Press Cursor ▼

Serial number displayed.
(Serial:MZ_bccdddddd, MZ:Fixed, b:One digits of the year, cc:Week number, dddddd:Serial number)

4. Product Mode 1

Startup display

"Product Mode1" displayed for 5 seconds.

Tested during production to perform the following settings automatically.
Tuner Preset
To exit this mode, unplug the power cord.

5. Product Mode 2

Startup display

"Product Mode2" displayed for 5 seconds.

Tested during production to perform the following settings automatically.
Sleep setting : 1 minutes
Auto Standby :1 minutes
Sleep setting and timer started.
Auto Standby to set up and will stand under the following conditions.

Auto Standby Conditions

USB/iPod : No Connection or continue no operation and Stop state.
Network : No Connection or continue no operation and Stop state.
Digital In USB, Digital In OPT, Digital In COAX : No Input(unlock)
M-XPort : No Input

To exit this mode, unplug the power cord.

6. Protection history display mode

Startup display

"Detect Protection" displayed for 5 seconds.

To exit this mode, unplug the power cord.

No history found

DC protect 1

Overvoltage of +B/-B

DC protect 2

Short of '+B/-B

Protection history is reset.

When the Cursor ▲ button is pressed for over 5 seconds while the protection history is displayed, the count value is reset.

After the reset is complete, the display “No Protection“.

Protection history is not cleared, even when the set is reset (Factory/User).

7. DPMS UP date mode

Update the firmware of DPMS.
Refer to VERSION UPGRADE PROCEDURE OF FIRMWARE

Error code table

- Preparation operation rewritten, Update error code checking.

Error Code	Details of Error code
01	Login failed(DPMS Access Login Incorrect notification)
02	Login failed(DPMS Access Server Busy information)
03	Login failed(DPMS Access link failure information)
04	Firm Info response acquisition error recived
05	Firm Info response acquisition TimeOut
06	All Firm Info response acquisition error recived
07	All Firm Info response acquisitionTimeOut
08	Main Firm Info response acquisition error recived
09	Main Firm Info response acquisition TimeOut
0A	DownLoad failed ((NG)information recieved)
0B	DownLoad failed((ServerBusy) information recieved)
0C	DownLoad failed((connection failed)information recived)

- Firm error codes at the main microprocessor rewritten.

Error Code	Details of Error code
10	Firm Info response acquisition TimeOut(Main rewrite Firmware recived failure(TimeOut))
11	Firm Info response acquisition recived error(Main rewrite Firmware recived failure(Error)
12	Firm Info response acquisition recived error (Main rewirte Firmware recived data incorrect(CheckSumError))
13	Rewrite failure (BlockErase failued before Main rewriting)
14	Rewrite failure (BlockWrite failued before Main rewriting)
15	Rewrite failure (Verify incorrect after Main rewriting)
36	Login failure(DPMSAccess Login incorrect infomation)
37	Login failure(DPMSAccess Server busy infomation)
38	Login failure(DPMSAccess connection failed infomation)
39	Login failure(DPMSAccess access TimeOut)
3A	DownLoad failure(Download error (NG)information recieved)
3B	DownLoad failure(Download error (ServerBusy) information recieved)
3C	DownLoad failure(Download error (connection failed)information recived)

• Firm error codes at the display microprocessor rewritten.

Error Code	Details of Error code
50	After download request, Login Failed
51	After download request, Login Failed
52	After download request, Login Failed
54	Error receiving response FirmInfo acquisition
55	FirmInfo Get Response TimeOut
56	Failure of DownLoad
57	Failure of DownLoad
58	Failure of DownLoad
5A	C command error
5B	L command error
5C	Receive error update data
5D	Receive error update data
5E	Receive error update data
5F	Receive error update data
60	P command error
61	I command error
62	Launch failure
70	T command error

• DM8x0 system Firm error codes when rewriting

Error Code	Details of Error code
A0	Net not connected
A1	Net Connection TimeOut can not get status
A2	Login failed
A3	Login failed
A4	Login failed
A6	Error receiving response FirmInfo acquisition
A7	FirmInfo Get Response TimeOut
A8	Net not connected
A9	Net Connection TimeOut can not get status
AA	After download request, Login Failed
AB	After download request, Login Failed
AC	After download request, Login Failed
AE	Failure of DownLoad
AF	Failure of DownLoad
B0	Failure of DownLoad
B2	Update error

Failure to update, After the move again 8x0 selfe display retry processing

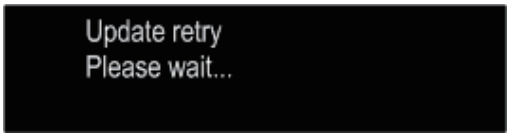

8. Update mode (by RS232C)

Development / Factory use.

9. MAC Address rewrite mode

Development / Factory use.

10. Access to development server mode

Development / Factory use.

ABOUT REPLACE THE MICROPROCESSOR WITH A NEW ONE

When replaced of the U-PRO (Microprocessor) or the Flash ROM, confirm contents of the following.

PWB Name	Ref. No.	Description	After replaced	Remark
DISPLAY	IC81	R5F64169DFD	**B**	
MAIN	IC31	R5F64169DFD	**B**	

After replaced

A : Mask ROM (With software). No need write-in of software to the microprocessor.

B : Flash ROM (With software). Usually, no need write-in of software. But, when the software was updated, you should be write-in of the new software to the microprocessor or flash ROM. Please check the software version.

C : Empty Flash ROM (Without software). You should be write-in of the software to the microprocessor or flash ROM. Refer to "Update procedure" or "writing procedure", when you should be write-in the software.

VERSION UPGRADE PROCEDURE OF FIRMWARE

You can update by downloading the latest firmware from the Internet.

1. Connecting to the Network

(1) System Requirement

- Internet Connection by Broadband Circuit
- Modem
- Router
- Ethernet cable (CAT-5 or greater recommended)

(2) Setting

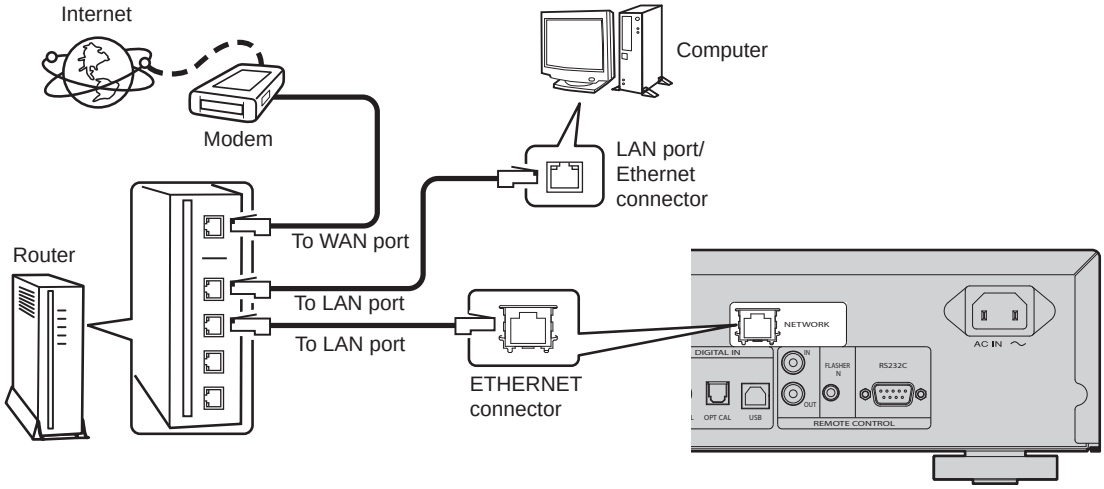

2. Check for Update and Update

Check if the latest firmware exists. You can also check approximately how long it will take to complete an update.

(1) Press ON/STANDBY button to turn on power.

(2) Press MENU button to display menu.

- Press Cursor ▲ / ▼ buttons select to Others. Press <ENTER>.
- Press Cursor ▲ / ▼ buttons select to Firmware Update. Press <ENTER>.
- Press Cursor ▲ / ▼ buttons select to CHECK For UPDATE.

(3) Press the ENTER buttom.

- The latest version of the firmware uploaded to the web is displayed.
- If the latest firmware version is on the web, proceed to (4).
- If the latest firmware is already installed, press the MENU button to close the Update menu.

(4) Press ENTER button. Select YES, then press ENTER button.

(5) To start the update.

--- Cautions on Firmware Update ---

- In order to use these functions, you must have the correct system requirements and settings for a broadband Internet connection.
- Do not turn off the power until updating is completed.
  Even with a broadband connection to the Internet, approximately about 1 hour is required for the updating procedure to be completed.
  Once updating starts, normal operations on the NA7004 cannot be performed until updating is completed.
  Also, setting items may be initialized.
  Make a note of the settings before updating, and set them again after updating.

CAUTION IN REPLACEMENT PARTS

1. After replacing IC912.

(IC912 is EEPROM (M24C16WMN6TP) for USB DAC(IC910 TE7022LDS))

When replacing the EEPROM, the following procedure as required to write the configuration.
If you do not do the following, please note that no sound output.

- Preparation -

- USB cable (Type B-TypeA)
- Writing data:USB_Descriptor_NA7004.txt
- Burning software:UsbEpromUty.exe

(1) The rear of the unit and the USB connector (B-type), PC's USB connection terminal (A-type).
Please use the USB cable on the market.

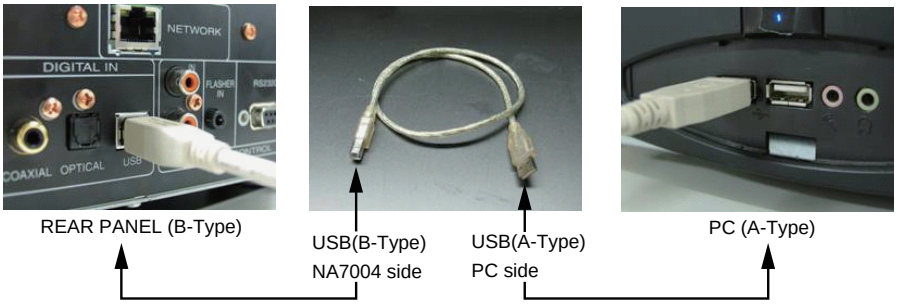

(2) Turn on this unit. Press Input source select "DIGITAL In USB".
(3) Paste the "USB_Descriptor_NA7004.txt" to your desktop of PC.

(4) Run ”UsbEpromUty.exe”.

(5) Select the file.

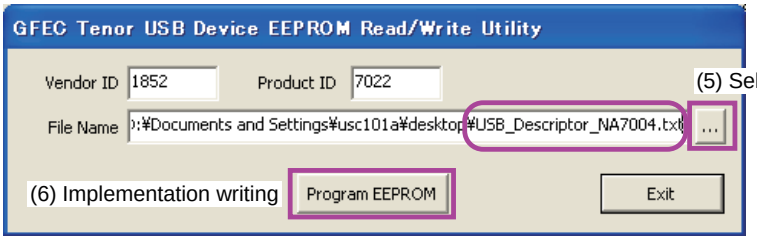

(6) Click the "Program EEPROM" button.
(7) When writing of the firmware is completed, you can see the ”Program EEPROM succeeds!” messsage.

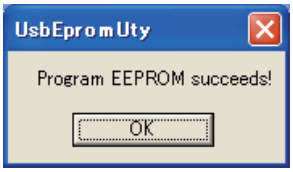

(8) If you can't complete the update, you can see ”Program EEPROM Failed!” message and please retry from (6).

Fails to write again, please do the following check.
Check USB cable connection.
Check IC910 and IC912 soldering.

2. After replacing Ethernet Unit Assy

When you replace this unit, you need software updates.
And MAC Address seal replacement is required.

- Preparation -

- RS-232 cable (Male to female, Straight).
- Burning software:FlashWriter7_005_forM-CR603_RCD-N7_NA7004.exe

(1) Connect the RS-232C cable from PC.
(2) Turn on the unit. Display is lit, wait for the normal state. (More than 1 minute)
(3) Run "FlashWriter7_005_forM-CR603_RCD-N7_NA7004.exe".
(4) Click "RS-232C" and "COM1"of Communication.

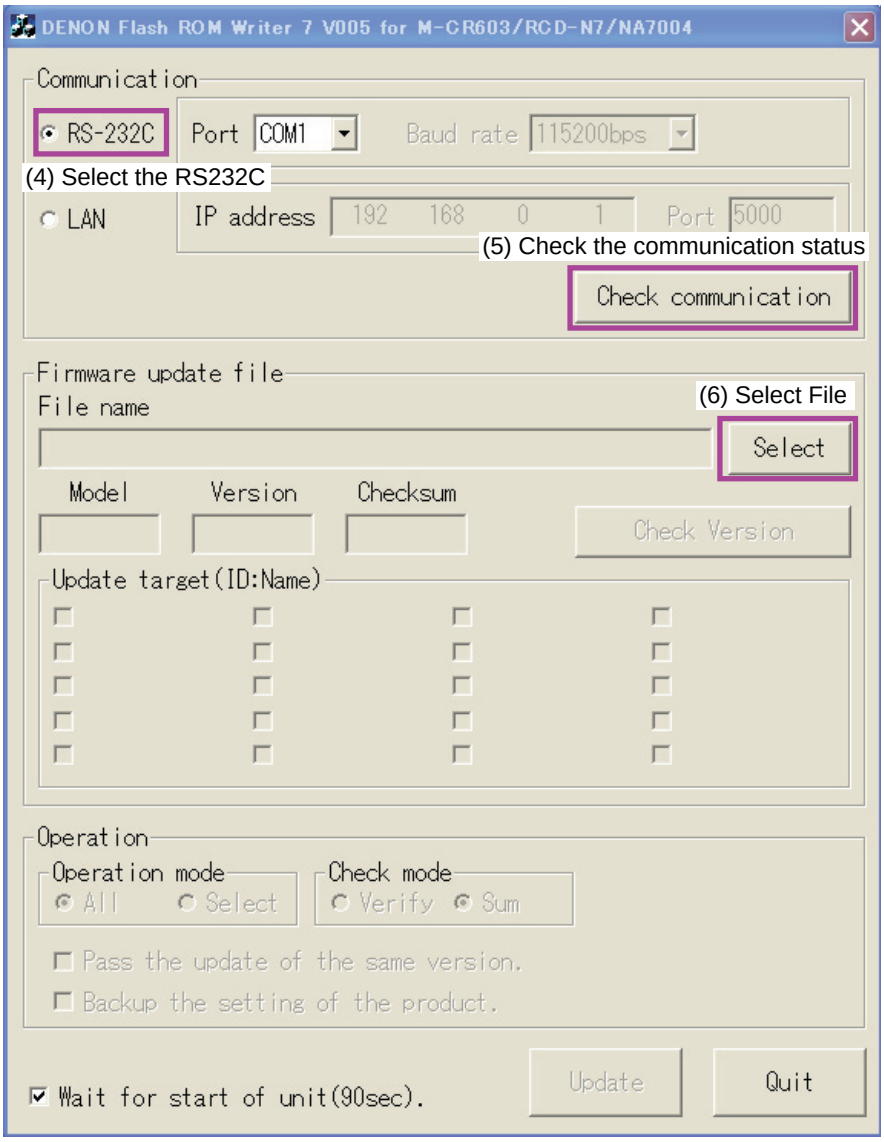

(5) Click "Check communication"button. Clik "OK".

NG was the case, please try again to change the port.

(6) Click "Select" button. Select the file.
For writing files, please use the latest version and then check the region.
(Example NA7004_DI201009010528EU.bin)

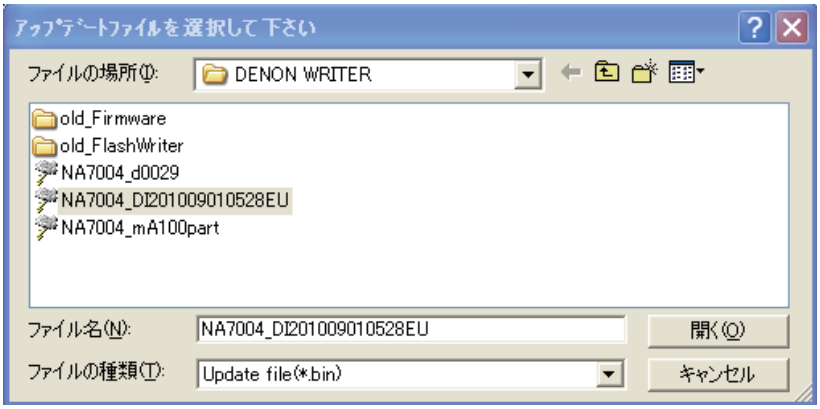

(7) Click "Select" of "Operation mode".

(8) Click "03:DM860IMG(i)".

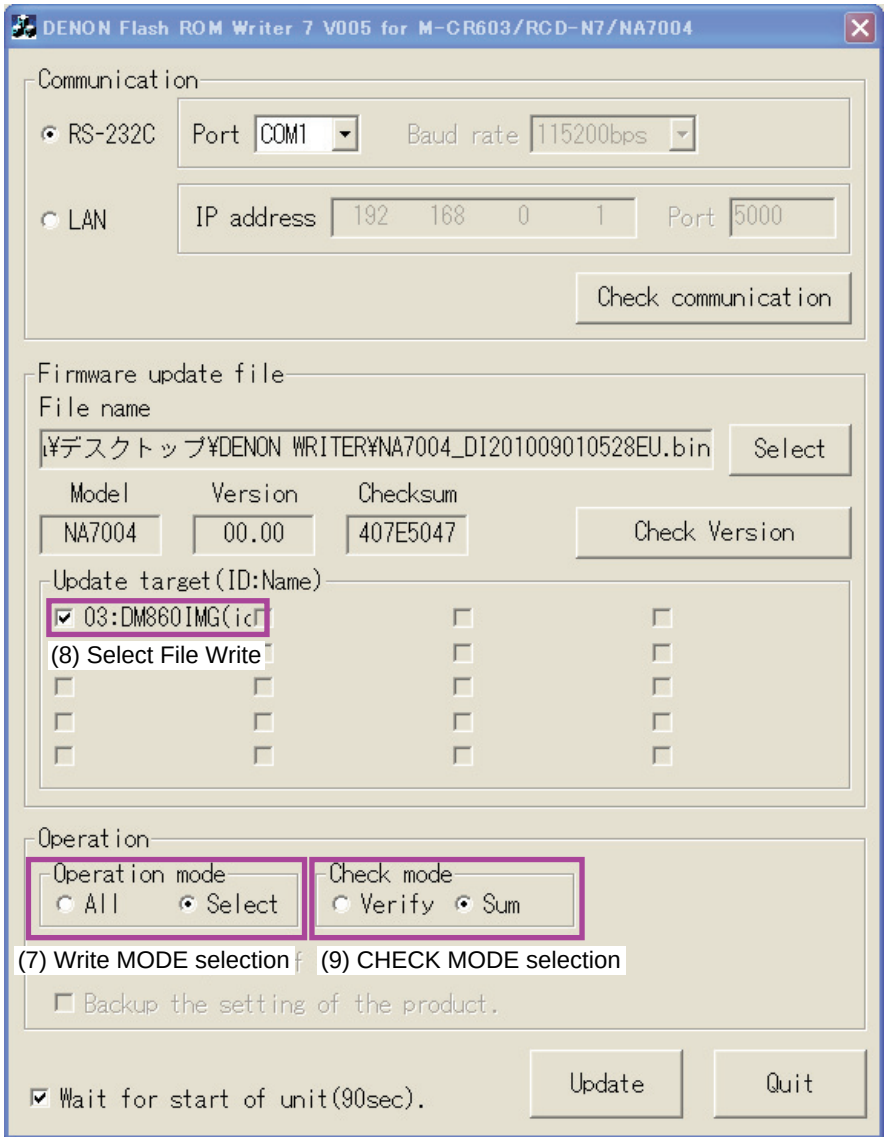

(9) Click "Sum" of "Check mode".

(10) Click "Update" button. (DM860IMG : about 29 minutes).

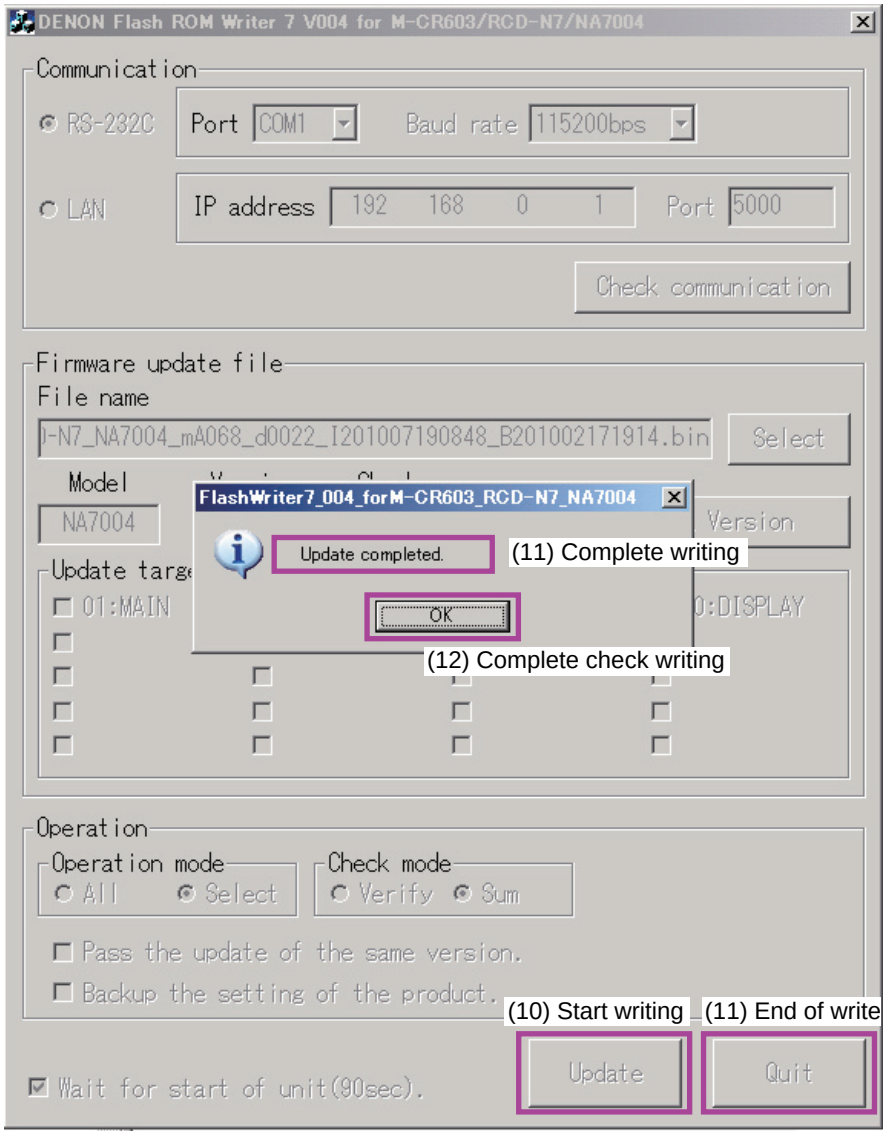

(11) When rewriting is completed, the dialog of "Update completed" is displayed.

(12) Click "OK".

(13) Click "Quit".

(14) Unplug the AC power.

(15) Plug the AC power.

Turn on this unit.This unit sets the version display mode.
Please confirm the firmware version.

(16) Check MAC Address.
MENU → Network → Network Info → MAC Address

(17) The back panel of the unit, MAC Address seals, please change new one.
Please confirm the MAC Address display is corresponding to the seal.

(18) Plug the power cord into a power outlet while pressing "Cursor ▼" button and "M-DAX" button simultaneously.(Fuctory Reset)

TROUBLE SHOOTING

1. OLED dosen't light

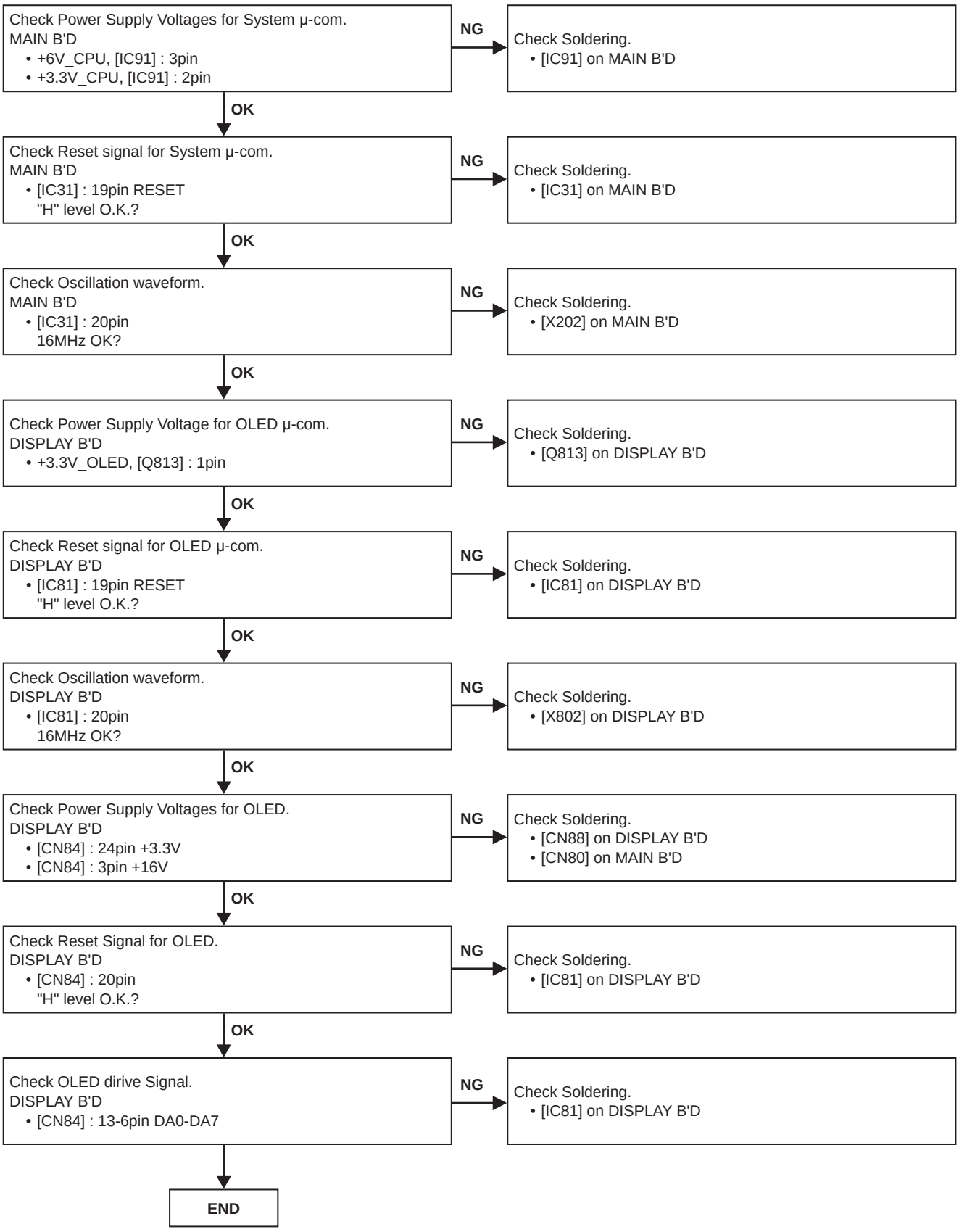

2. No Sound,Noise generated

2.1. AM/FM TUNER-in (N Version)

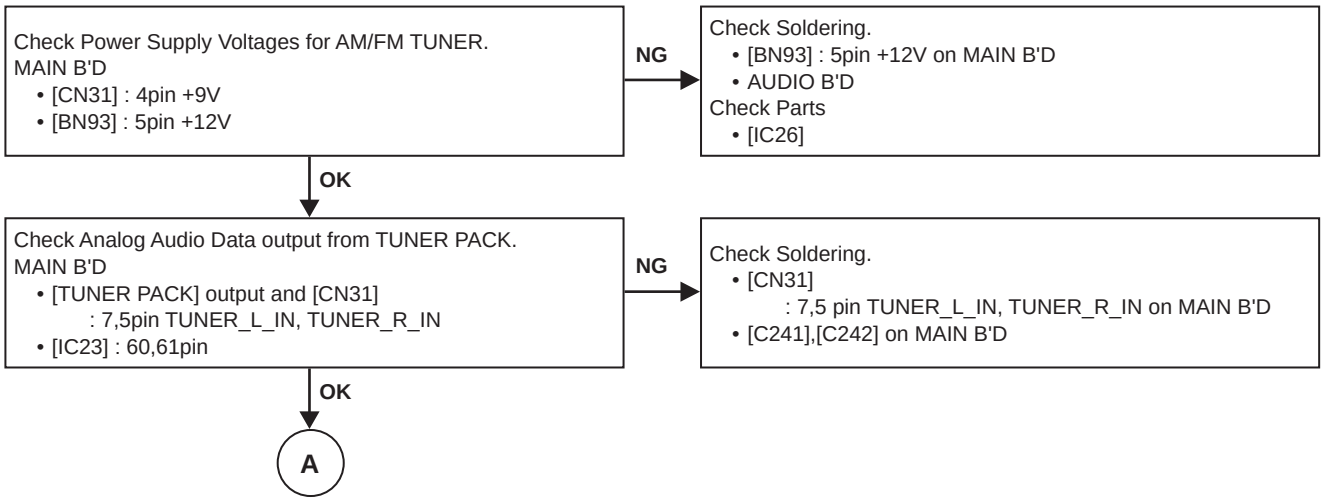

2.2 . DAB TUNER-in (N Version)

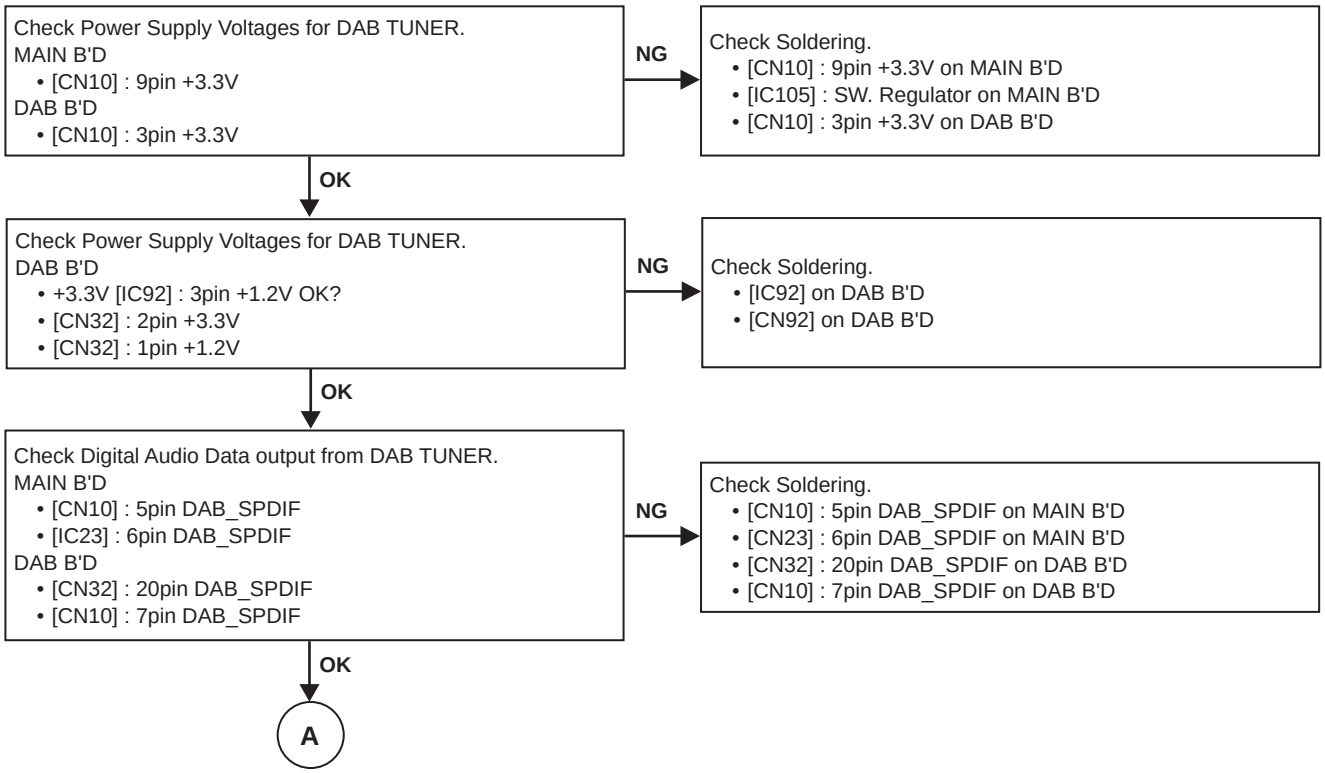

2.3. OPTICAL IN

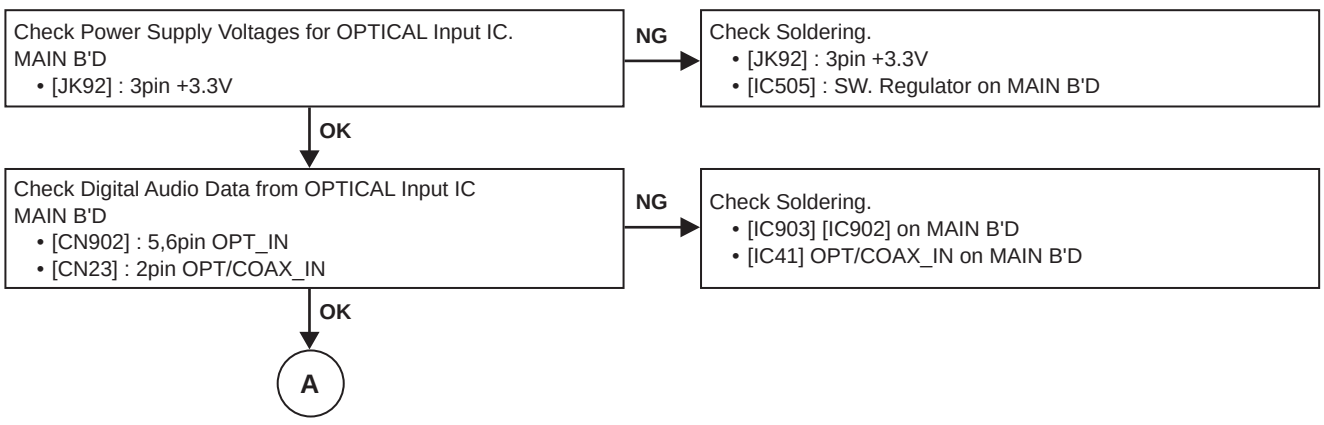

2.4. COAXIAL IN

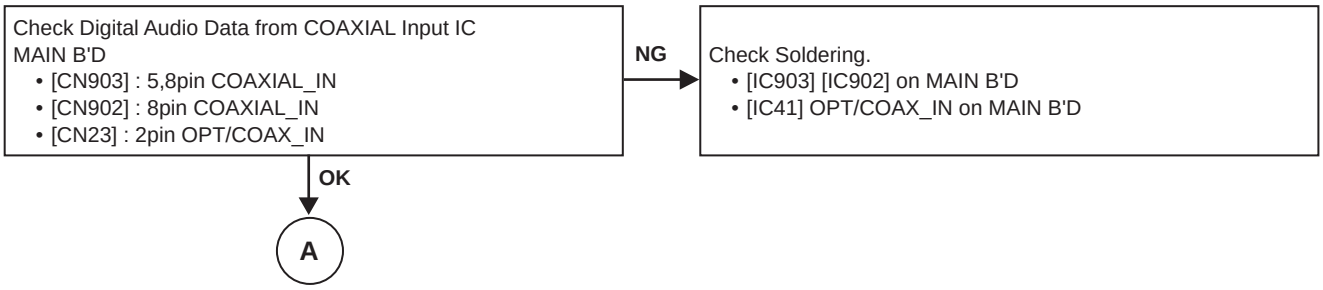

2.5 . USB/ETHERNET

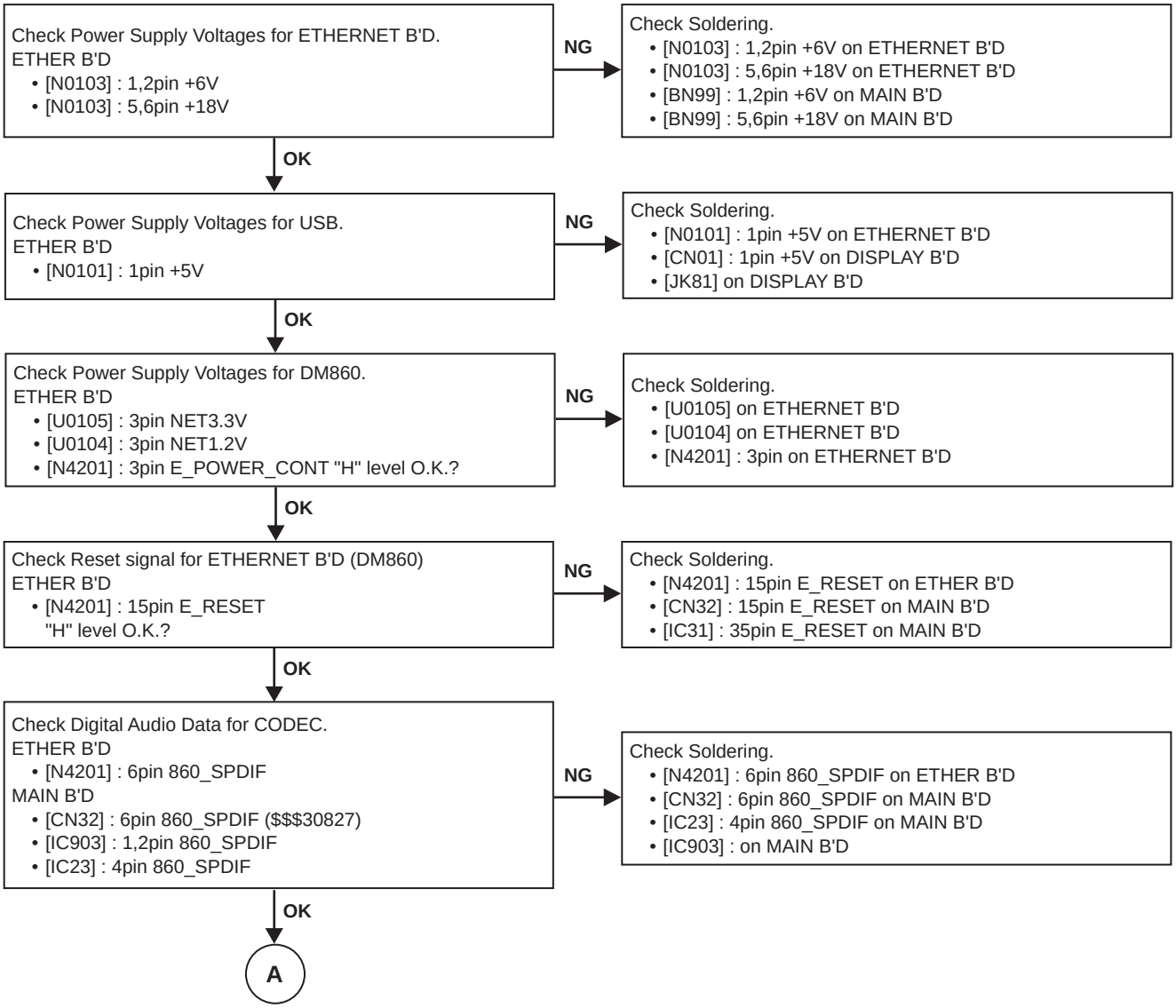

2.6. USB DAC (DIGITAL IN USB)

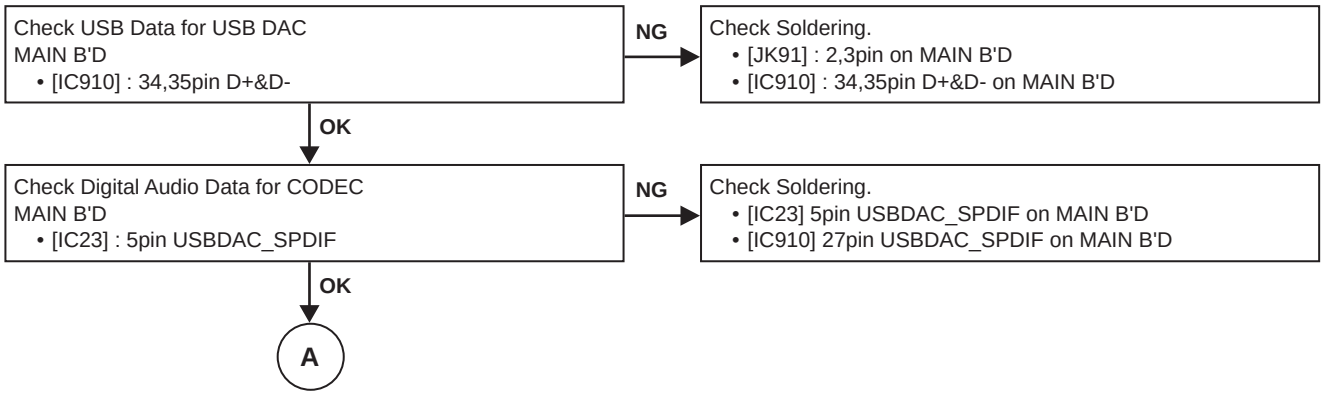

2.7. COMMON PART

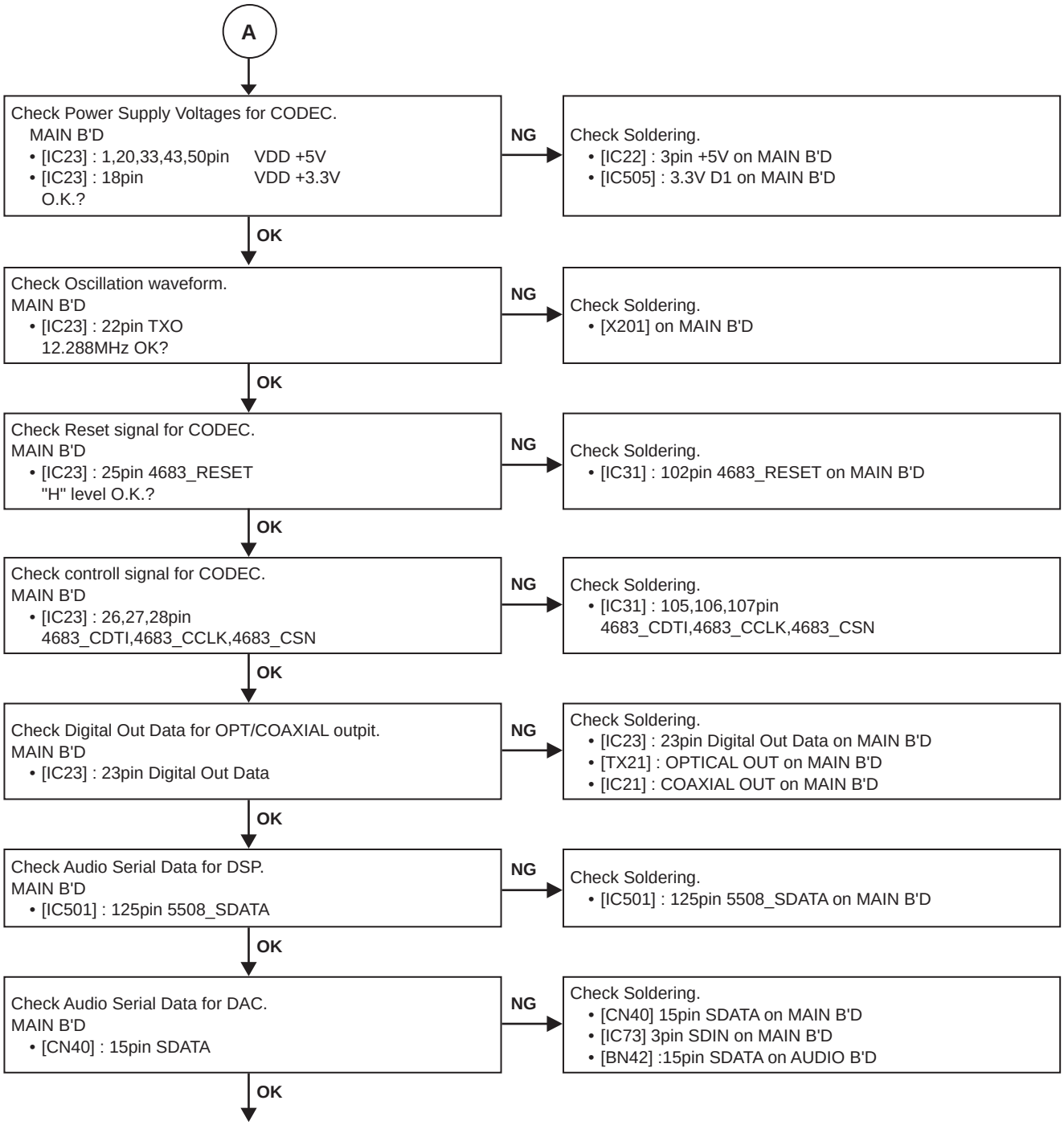

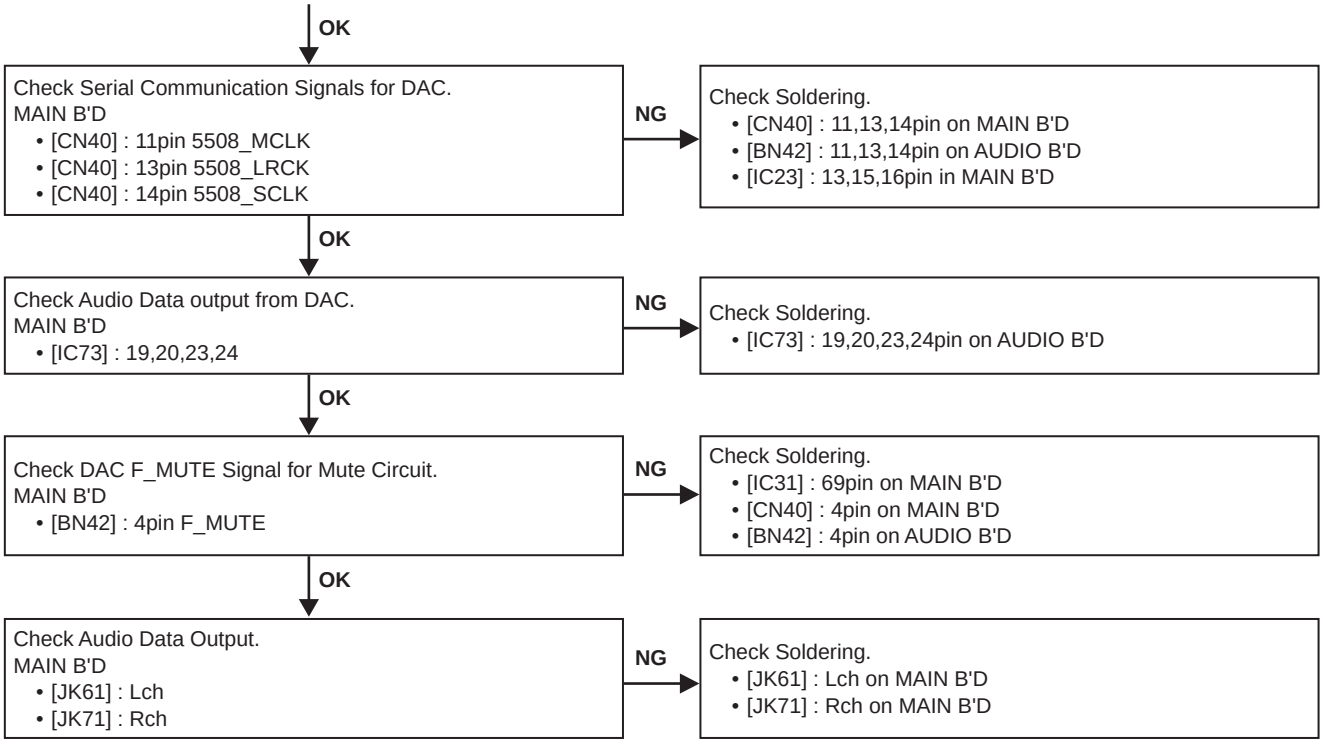
OK
Check Serial Communication Signals for DAC.
MAIN B'D
• [CN40] : 11pin 5508_MCLK
• [CN40] : 13pin 5508_LRCK
• [CN40] : 14pin 5508_SCLK
NG
Check Soldering.
• [CN40] : 11,13,14pin on MAIN B'D
• [BN42] : 11,13,14pin on AUDIO B'D
• [IC23] : 13,15,16pin in MAIN B'D
OK
Check Audio Data output from DAC.
MAIN B'D
• [IC73] : 19,20,23,24
NG
Check Soldering.
• [IC73] : 19,20,23,24pin on AUDIO B'D
OK
Check DAC F_MUTE Signal for Mute Circuit.
MAIN B'D
• [BN42] : 4pin F_MUTE
NG
Check Soldering.
• [IC31] : 69pin on MAIN B'D
• [CN40] : 4pin on MAIN B'D
• [BN42] : 4pin on AUDIO B'D
OK
Check Audio Data Output.
MAIN B'D
• [JK61] : Lch
• [JK71] : Rch
NG
Check Soldering.
• [JK61] : Lch on MAIN B'D
• [JK71] : Rch on MAIN B'D

BLOCK DIAGRAM

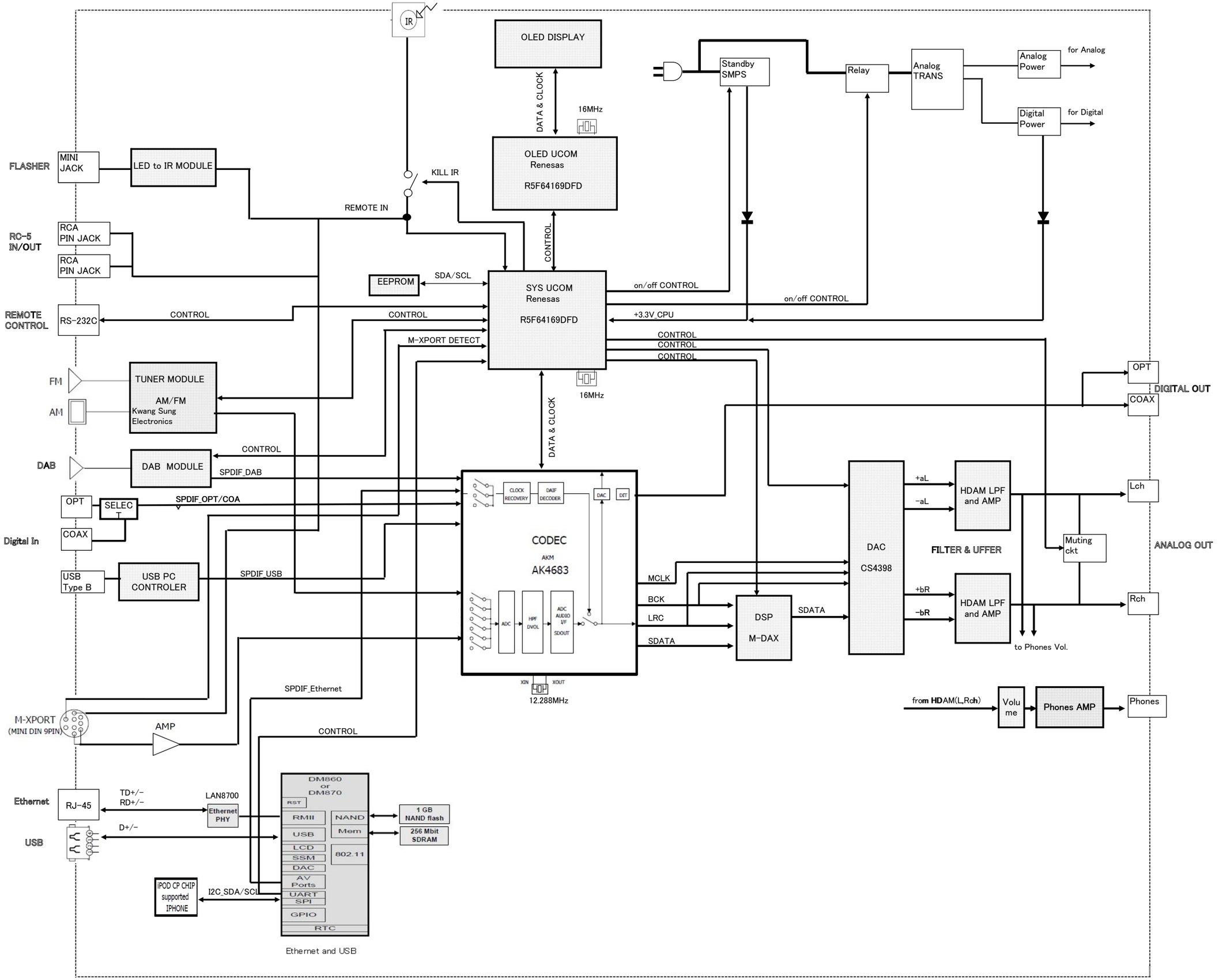

POWER DIAGRAM

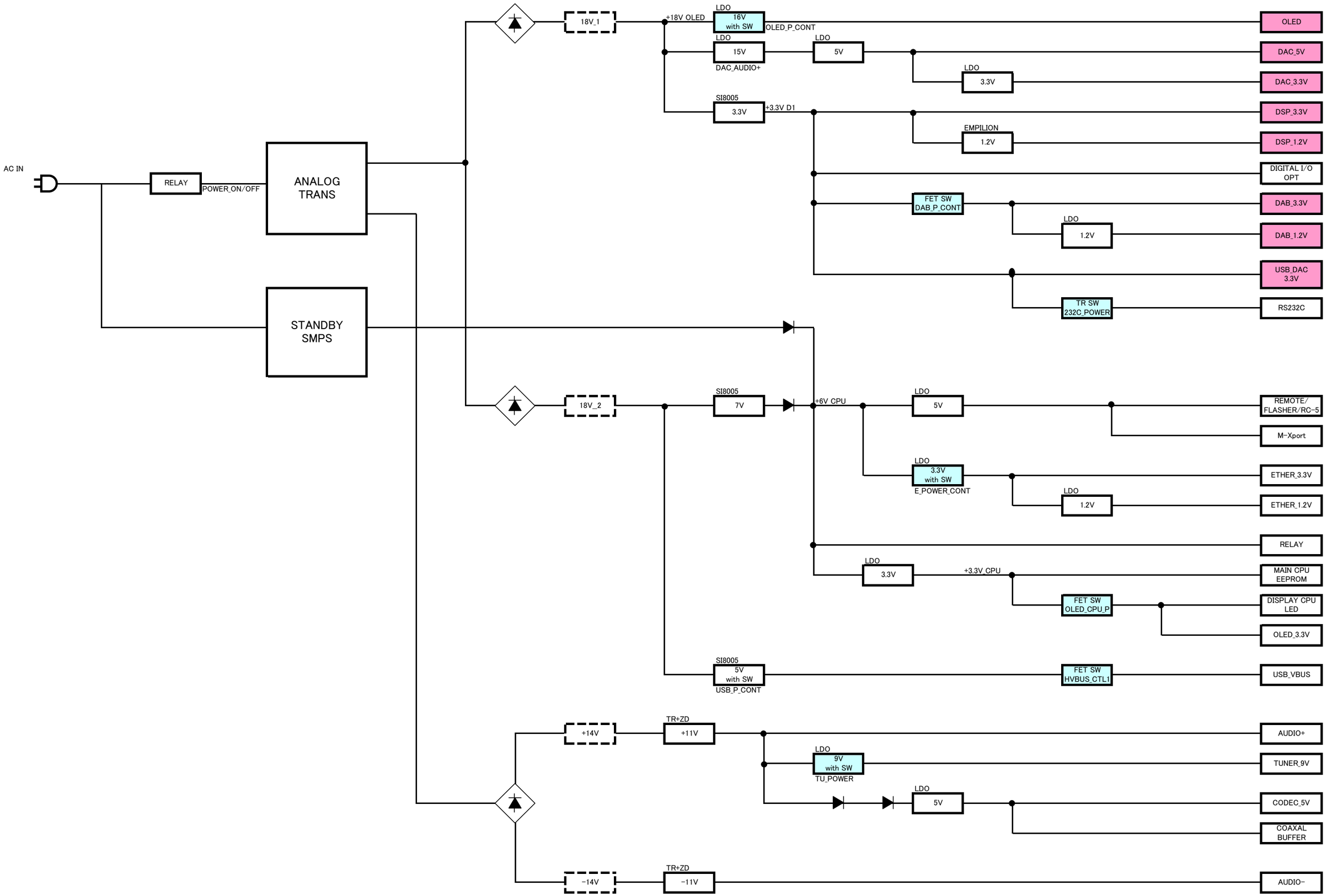

WIRING DIAGRAM

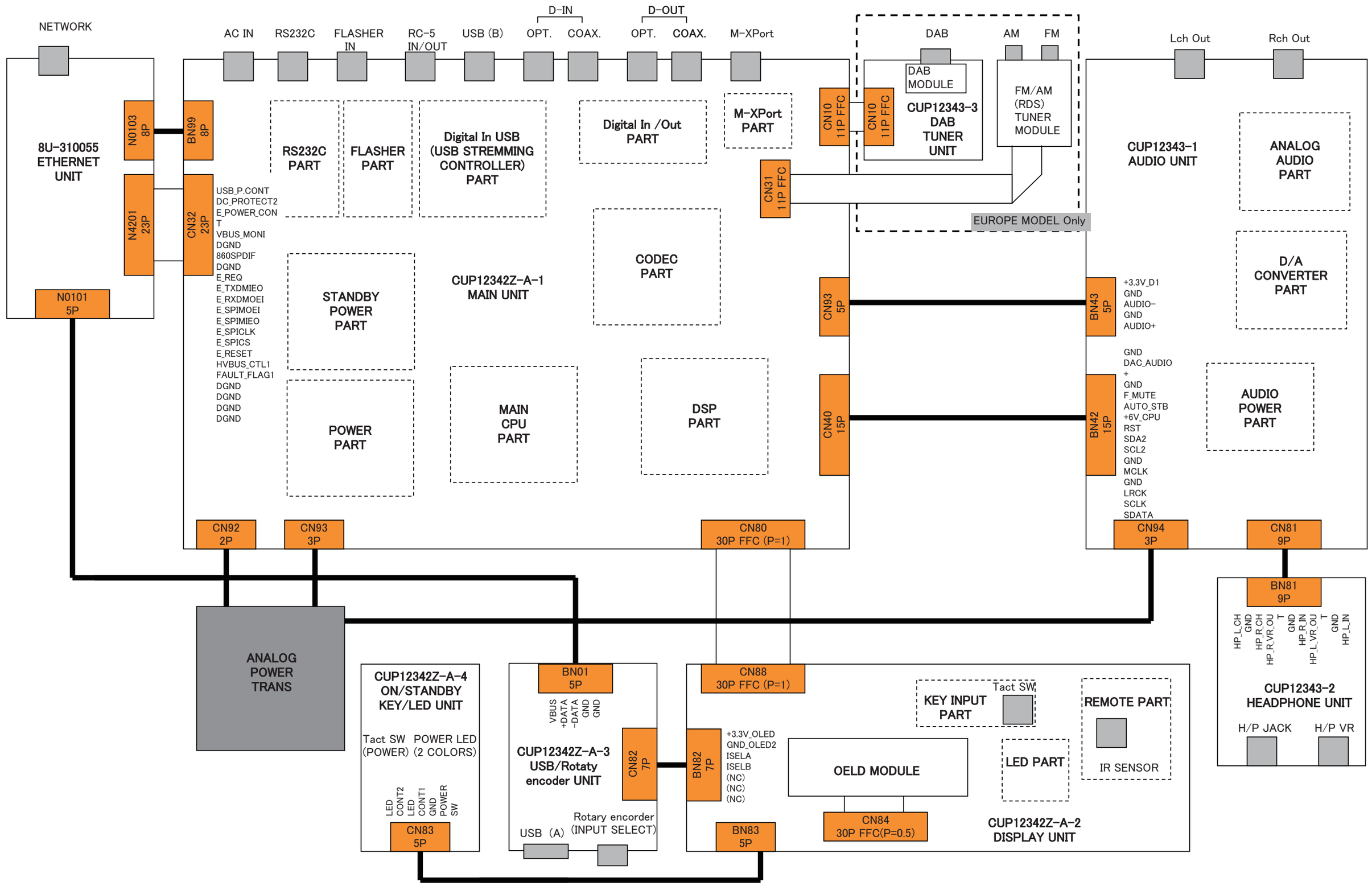

PRINTED WIRING BOARDS

MAIN PCB (COMPONENT SIDE)

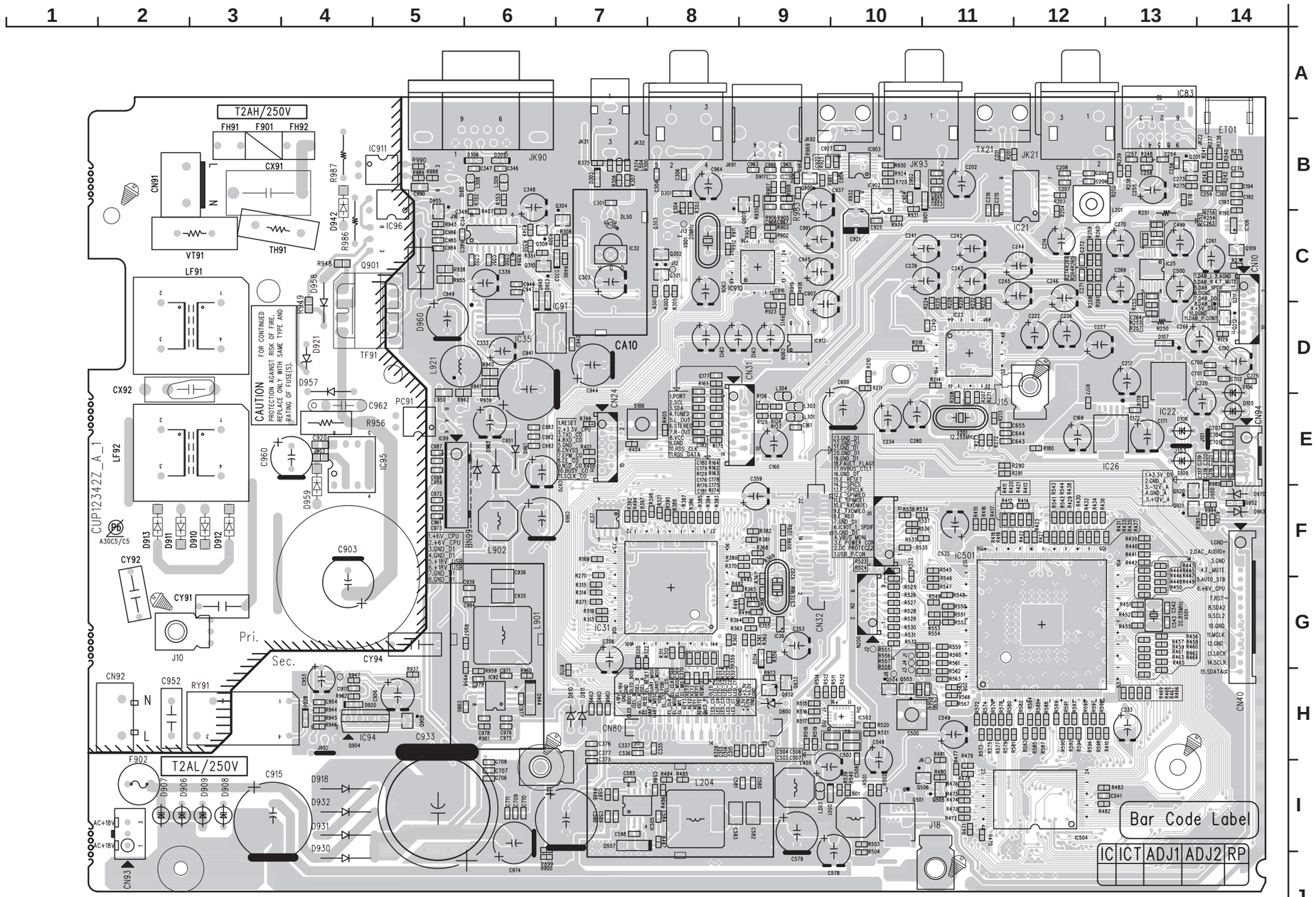
1
2
3
4
5
6
7
8
9
10
11
12
13
14
A
B
C
D
E
F
G
H
I
J
T2AH/250V
FH91
F901
FH92
CX91
CN91
VT91
TH91
LF91
CX92
LF92
CUP1234ZZ_A_1
P6
A30C5/C5
D913
D911
D910
D912
CY92
CY91
J10
Pri.
Sec.
CN92
C952
RY91
F902
T2AL/250V
AC+18V
AC+18V
CN93
CN94
CN10
CN40
CN80
CN31
CN32
JK90
JK91
JK92
JK93
JK31
JK32
IC83
ET01
TX21
JK21
IC21
IC91
IC910
IC911
IC96
IC35
IC24
IC22
IC26
IC501
IC31
IC36
IC94
IC95
IC504
CA10
Q901
Q904
Q902
Q503
Q506
Q501
TF91
PC91
J15
J18
L902
L901
L921
L204
D960
D921
D957
D958
D959
D962
D963
D970
D952
D918
D932
D931
D930
C962
C960
C903
C915
C933
C974
C579
C578
R956
R948
R949
R987
R986
R942
R990
R988
R989
R938
R955
R939
R940
R941
R950
R951
R952
R953
R954
R947
R946
R945
R944
R943
R937
R959
R960
R961
R962
R963
R964
R965
R966
R967
R968
R969
R970
R971
R972
R973
R974
R975
R976
R977
R978
R979
R980
R981
R982
R983
R984
R985
R986
R987
R988
R989
R990
R991
R992
R993
R994
R995
R996
R997
R998
R999
R1000
R1001
R1002
R1003
R1004
R1005
R1006
R1007
R1008
R1009
R1010
R1011
R1012
R1013
R1014
R1015
R1016
R1017
R1018
R1019
R1020
R1021
R1022
R1023
R1024
R1025
R1026
R1027
R1028
R1029
R1030
R1031
R1032
R1033
R1034
R1035
R1036
R1037
R1038
R1039
R1040
R1041
R1042
R1043
R1044
R1045
R1046
R1047
R1048
R1049
R1050
R1051
R1052
R1053
R1054
R1055
R1056
R1057
R1058
R1059
R1060
R1061
R1062
R1063
R1064
R1065
R1066
R1067
R1068
R1069
R1070
R1071
R1072
R1073
R1074
R1075
R1076
R1077
R1078
R1079
R1080
R1081
R1082
R1083
R1084
R1085
R1086
R1087
R1088
R1089
R1090
R1091
R1092
R1093
R1094
R1095
R1096
R1097
R1098
R1099
R1100
R1101
R1102
R1103
R1104
R1105
R1106
R1107
R1108
R1109
R1110
R1111
R1112
R1113
R1114
R1115
R1116
R1117
R1118
R1119
R1120
R1121
R1122
R1123
R1124
R1125
R1126
R1127
R1128
R1129
R1130
R1131
R1132
R1133
R1134
R1135
R1136
R1137
R1138
R1139
R1140
R1141
R1142
R1143
R1144
R1145
R1146
R1147
R1148
R1149
R1150
R1151
R1152
R1153
R1154
R1155
R1156
R1157
R1158
R1159
R1160
R1161
R1162
R1163
R1164
R1165
R1166
R1167
R1168
R1169
R1170
R1171
R1172
R1173
R1174
R1175
R1176
R1177
R1178
R1179
R1180
R1181
R1182
R1183
R1184
R1185
R1186
R1187
R1188
R1189
R1190
R1191
R1192
R1193
R1194
R1195
R1196
R1197
R1198
R1199
R1200
R1201
R1202
R1203
R1204
R1205
R1206
R1207
R1208
R1209
R1210
R1211
R1212
R1213
R1214
R1215
R1216
R1217
R1218
R1219
R1220
R1221
R1222
R1223
R1224
R1225
R1226
R1227
R1228
R1229
R1230
R1231
R1232
R1233
R1234
R1235
R1236
R1237
R1238
R1239
R1240
R1241
R1242
R1243
R1244
R1245
R1246
R1247
R1248
R1249
R1250
R1251
R1252
R1253
R1254
R1255
R1256
R1257
R1258
R1259
R1260
R1261
R1262
R1263
R1264
R1265
R1266
R1267
R1268
R1269
R1270
R1271
R1272
R1273
R1274
R1275
R1276
R1277
R1278
R1279
R1280
R1281
R1282
R1283
R1284
R1285
R1286
R1287
R1288
R1289
R1290
R1291
R1292
R1293
R1294
R1295
R1296
R1297
R1298
R1299
R1300
R1301
R1302
R1303
R1304
R1305
R1306
R1307
R1308
R1309
R1310
R1311
R1312
R1313
R1314
R1315
R1316
R1317
R1318
R1319
R1320
R1321
R1322
R1323
R1324
R1325
R1326
R1327
R1328
R1329
R1330
R1331
R1332
R1333
R1334
R1335
R1336
R1337
R1338
R1339
R1340
R1341
R1342
R1343
R1344
R1345
R1346
R1347
R1348
R1349
R1350
R1351
R1352
R1353
R1354
R1355
R1356
R1357
R1358
R1359
R1360
R1361
R1362
R1363
R1364
R1365
R1366
R1367
R1368
R1369
R1370
R1371
R1372
R1373
R1374
R1375
R1376
R1377
R1378
R1379
R1380
R1381
R1382
R1383
R1384
R1385
R1386
R1387
R1388
R1389
R1390
R1391
R1392
R1393
R1394
R1395
R1396
R1397
R1398
R1399
R1400
R1401
R1402
R1403
R1404
R1405
R1406
R1407
R1408
R1409
R1410
R1411
R1412
R1413
R1414
R1415
R1416
R1417
R1418
R1419
R1420
R1421
R1422
R1423
R1424
R1425
R1426
R1427
R1428
R1429
R1430
R1431
R1432
R1433
R1434
R1435
R1436
R1437
R1438
R1439
R1440
R1441
R1442
R1443
R1444
R1445
R1446
R1447
R1448
R1449
R1450
R1451
R1452
R1453
R1454
R1455
R1456
R1457
R1458
R1459
R1460
R1461
R1462
R1463
R1464
R1465
R1466
R1467
R1468
R1469
R1470
R1471
R1472
R1473
R1474
R1475
R1476
R1477
R1478
R1479
R1480
R1481
R1482
R1483
R1484
R1485
R1486
R1487
R1488
R1489
R1490
R1491
R1492
R1493
R1494
R1495
R1496
R1497
R1498
R1499
R1500
R1501
R1502
R1503
R1504
R1505
R1506
R1507
R1508
R1509
R1510
R1511
R1512
R1513
R1514
R1515
R1516
R1517
R1518
R1519
R1520
R1521
R1522
R1523
R1524
R1525
R1526
R1527
R1528
R1529
R1530
R1531
R1532
R1533
R1534
R1535
R1536
R1537
R1538
R1539
R1540
R1541
R1542
R1543
R1544
R1545
R1546
R1547
R1548
R1549
R1550
R1551
R1552
R1553
R1554
R1555
R1556
R1557
R1558
R1559
R1560
R1561
R1562
R1563
R1564
R1565
R1566
R1567
R1568
R1569
R1570
R1571
R1572
R1573
R1574
R1575
R1576
R1577
R1578
R1579
R1580
R1581
R1582
R1583
R1584
R1585
R1586
R1587
R1588
R1589
R1590
R1591
R1592
R1593
R1594
R1595
R1596
R1597
R1598
R1599
R1600
C100
C101
C102
C103
C104
C105
C106
C107
C108
C109
C110
C111
C112
C113
C114
C115
C116
C117
C118
C119
C120
C121
C122
C123
C124
C125
C126
C127
C128
C129
C130
C131
C132
C133
C134
C135
C136
C137
C138
C139

MAIN PCB (FOIL SIDE)

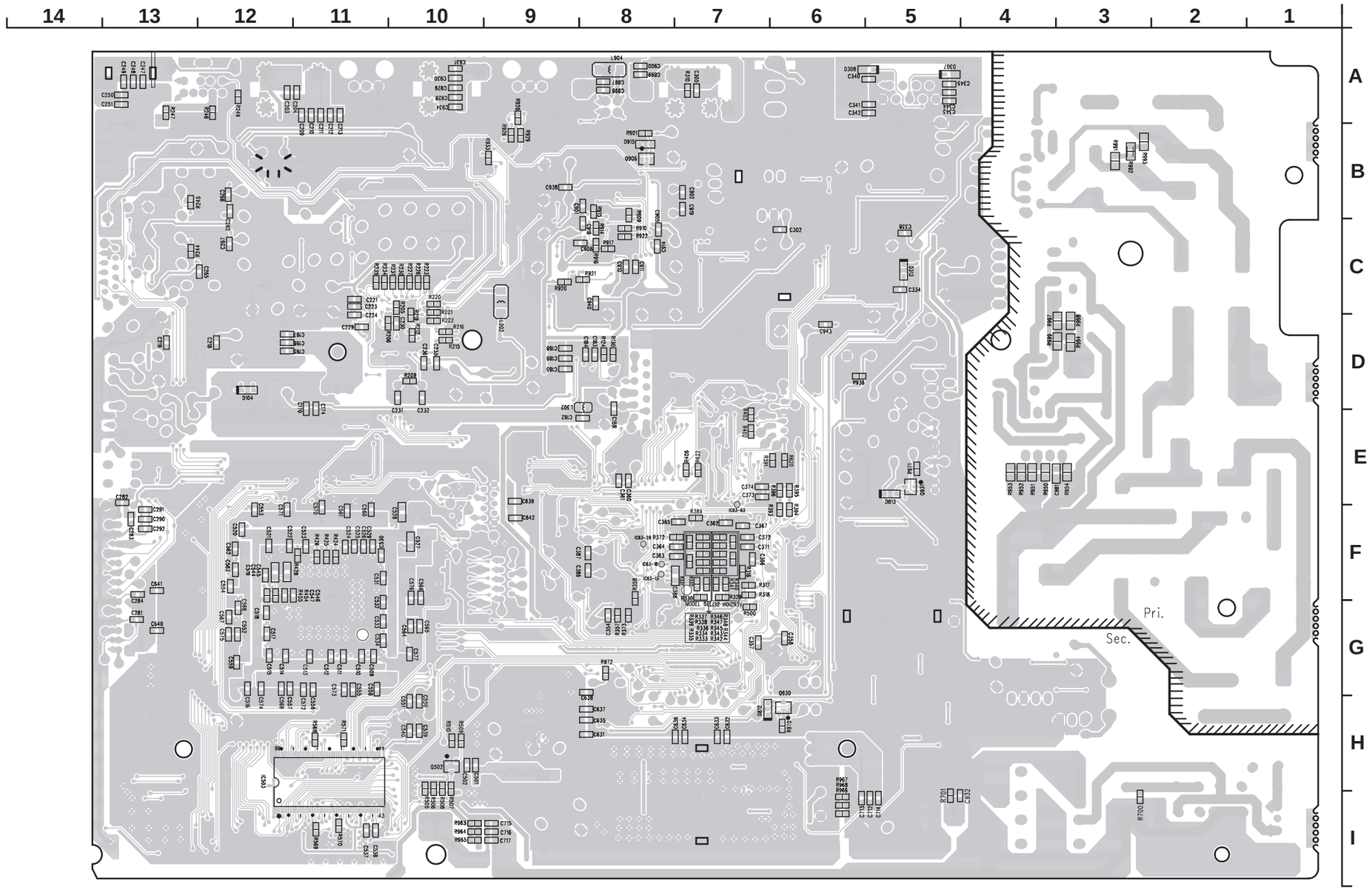

鉛フリー半田

半田付けには、鉛フリー半田 (Sn-Ag-Cu) を使用してください。

Lead-free Solder

When soldering, use the Lead-free Solder (Sn-Ag-Cu).

USB PCB (COMPONENT SIDE)

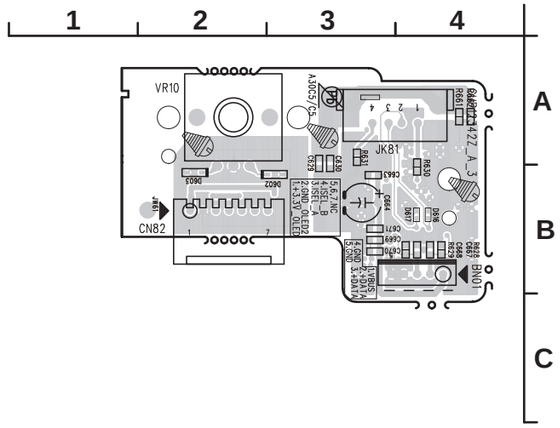

USB PCB (FOIL SIDE)

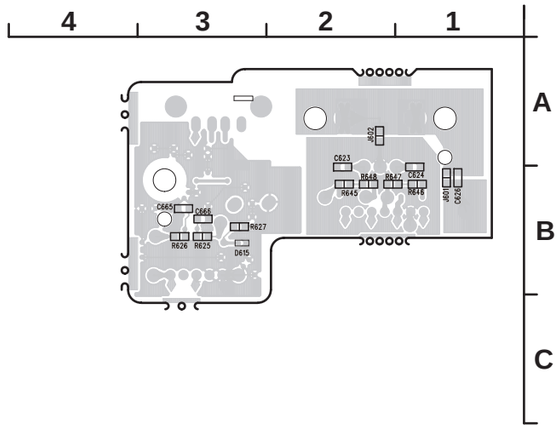

STANDBY PCB (COMPONENT SIDE)

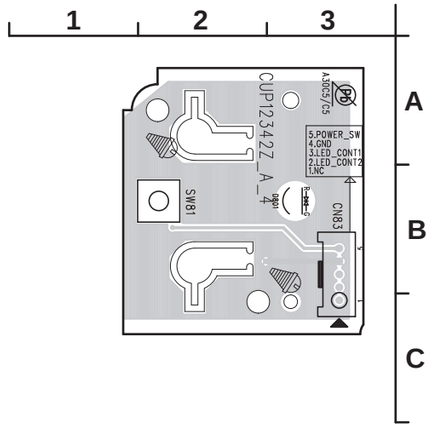

STANDBY (FOIL SIDE)

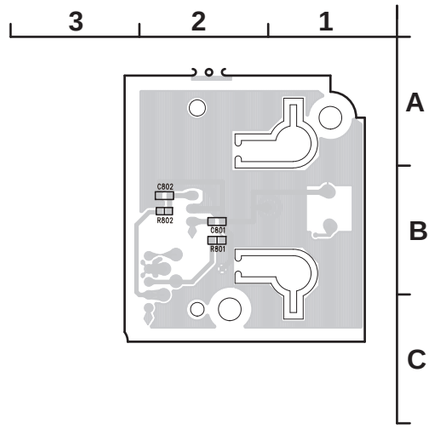

DISPLAY PCB (COMPONENT SIDE)

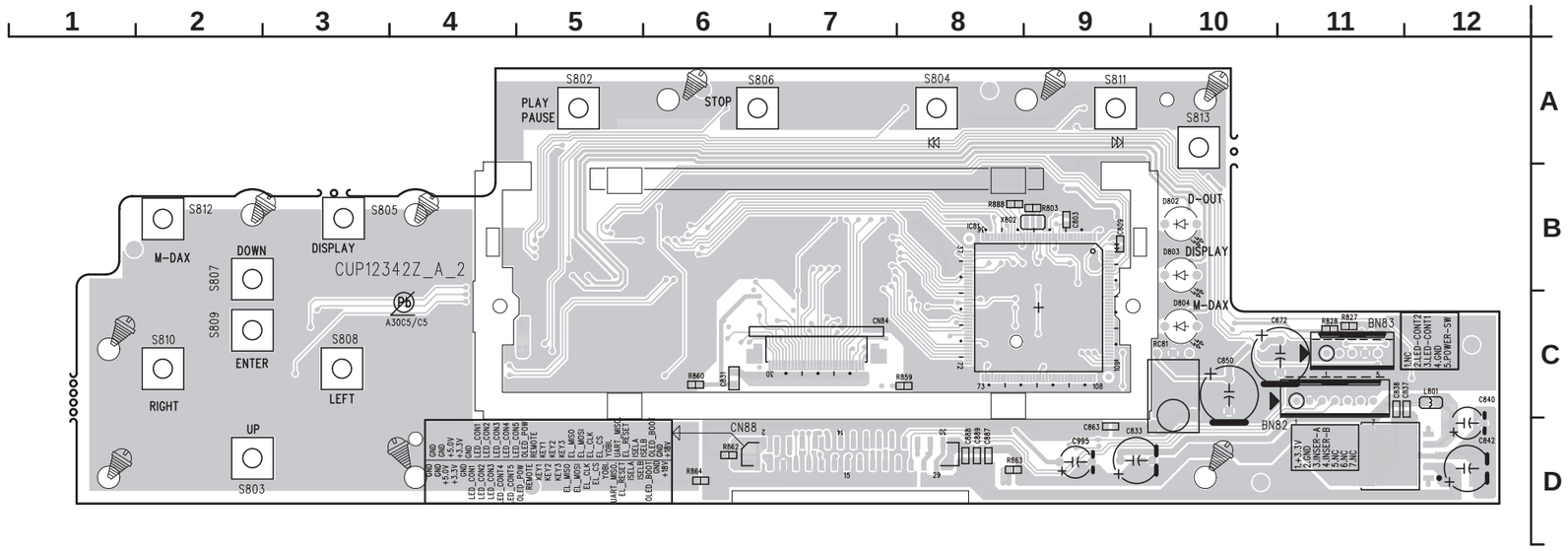

DISPLAY PCB (FOIL SIDE)

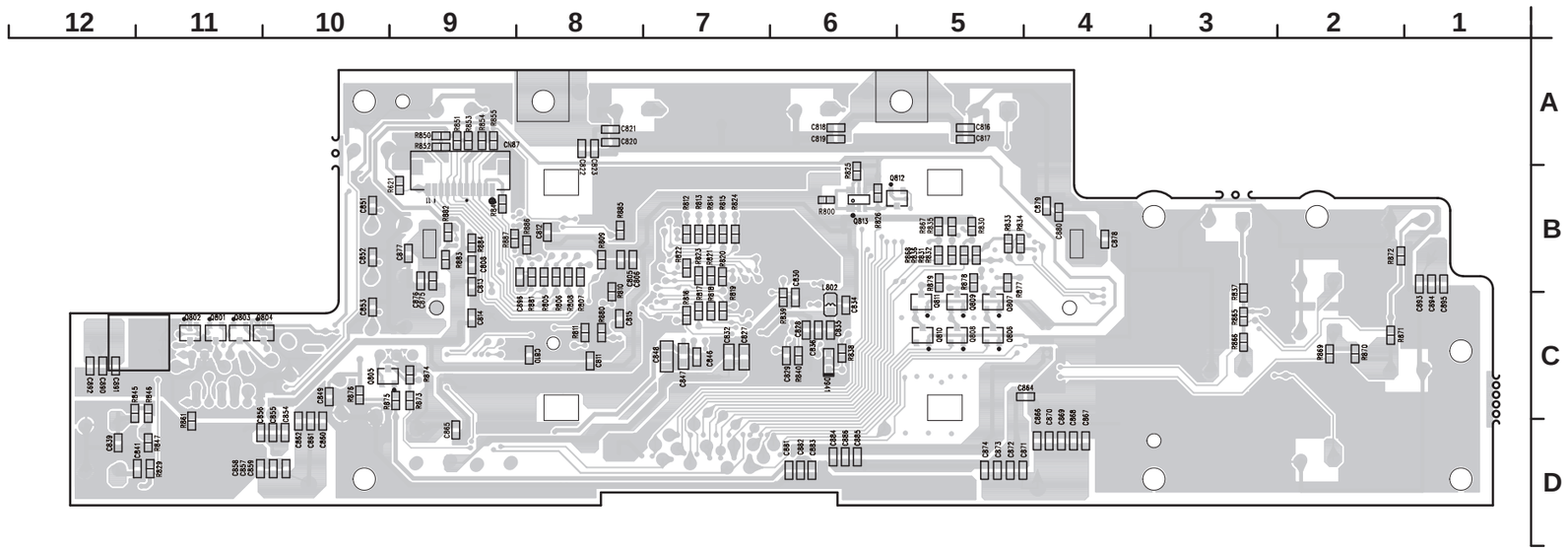

鉛フリー半田
半田付けには、鉛フリー半田 (Sn-Ag-Cu) を使用してください。

Lead-free Solder
When soldering, use the Lead-free Solder (Sn-Ag-Cu).

ETHERNET PCB (COMPONENT SIDE)

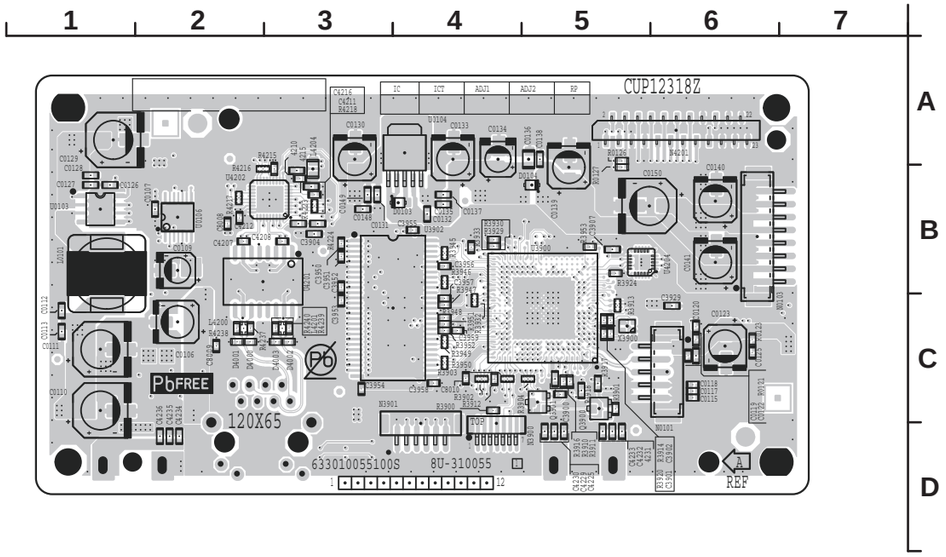

ETHERNET PCB (FOIL SIDE)

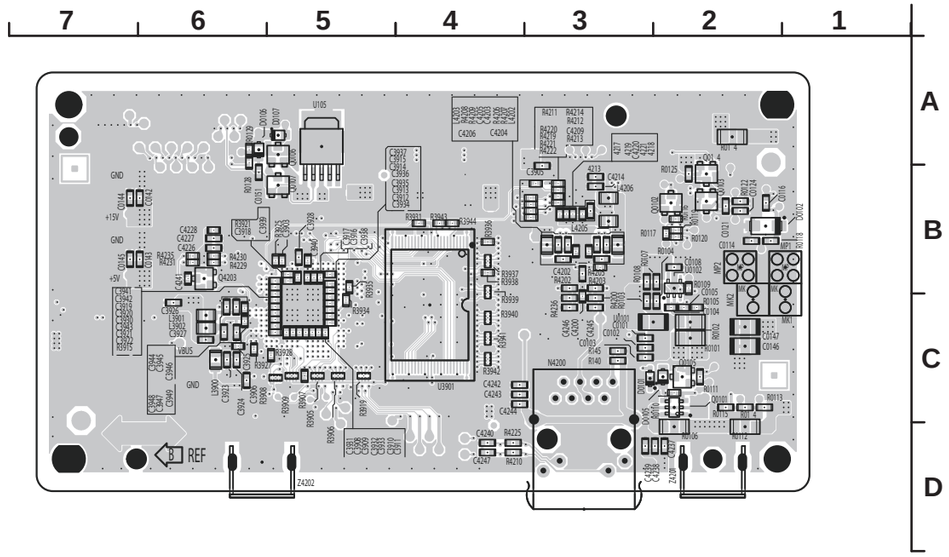

PHONE PCB (COMPONENT SIDE)

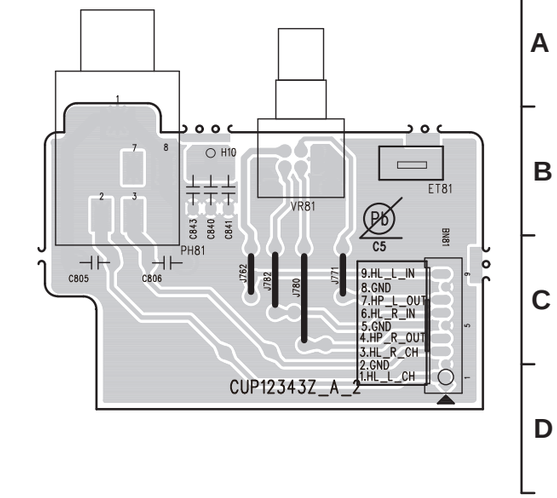

DAB PCB (COMPONENT SIDE)

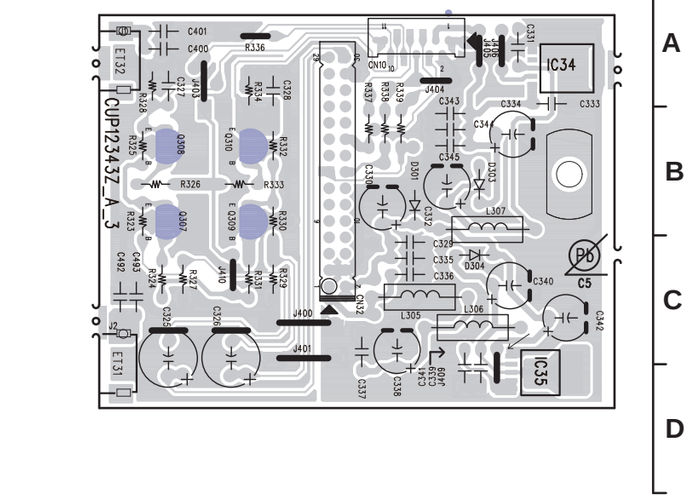

鉛フリー半田
半田付けには、鉛フリー半田 (Sn-Ag-Cu) を使用してください。

Lead-free Solder
When soldering, use the Lead-free Solder (Sn-Ag-Cu).

AUDIO PCB (COMPONENT SIDE)

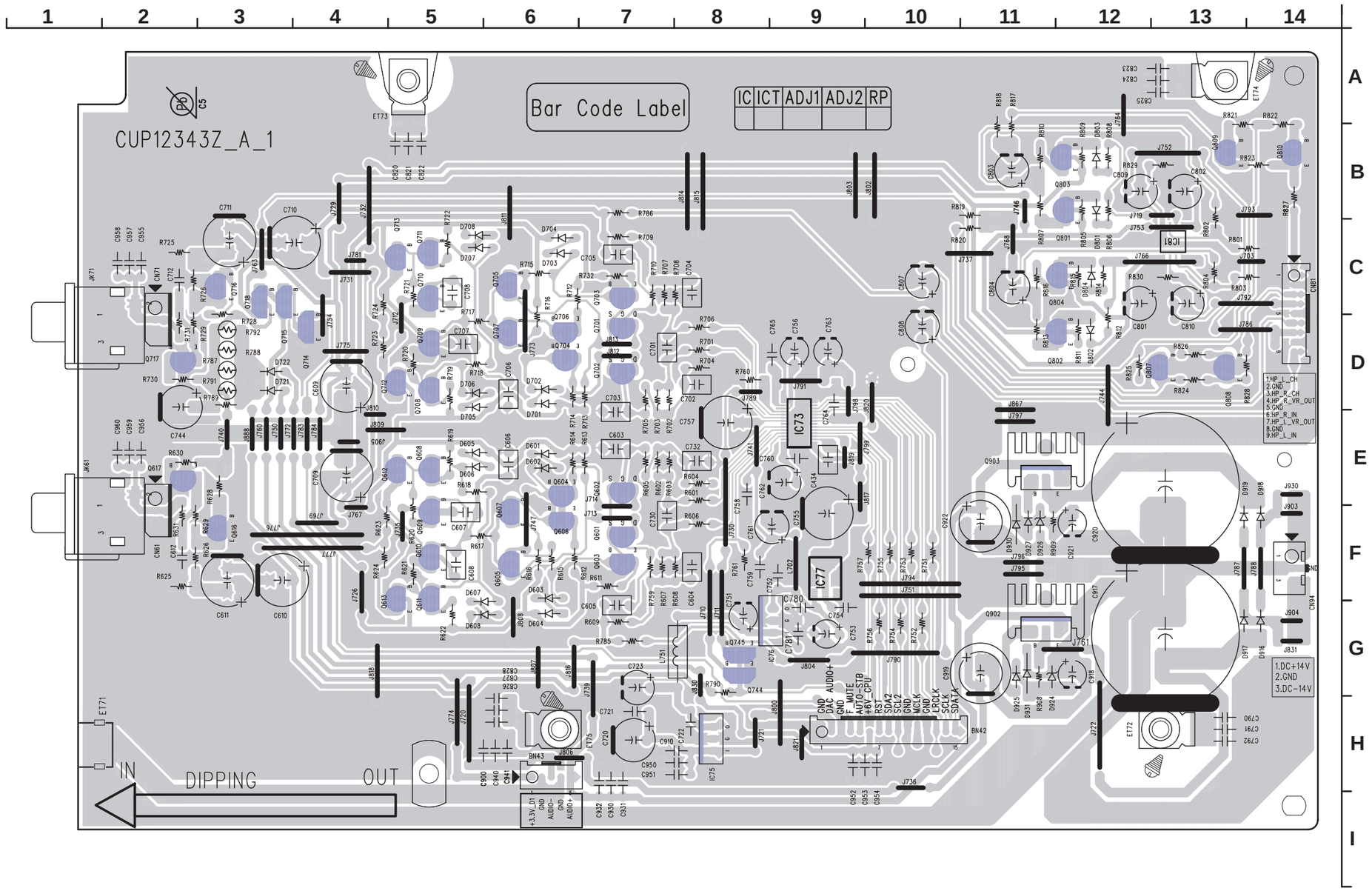

DSP

TO MAIN

TO CODEC BLOCK

IC501
CVIADSP21367KSWZ2A

IC502
CVIENS3110Q

IC503
W9412G6IB-5I

IC504
W9412G6IB-5I

Q501 OPEN

Q502 OPEN

Q503 A102S

Q504 C1025

Q505 A102S

Q506 C1025

S500 OPEN

L203 C 2W-600Z

L204 10UH/3A

L205 600

L501 OPEN

X501 20.16M

X502 32.768K

X503 24.576M

J15

GND

POWER +

POWER -

SCHEMATIC DIAGRAMS (1/12)

USB STREMMING CONTROLLER

WAVEFORMS

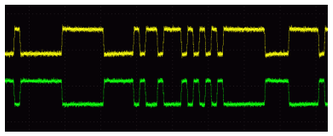

TO CODEC BLOCK

5/12

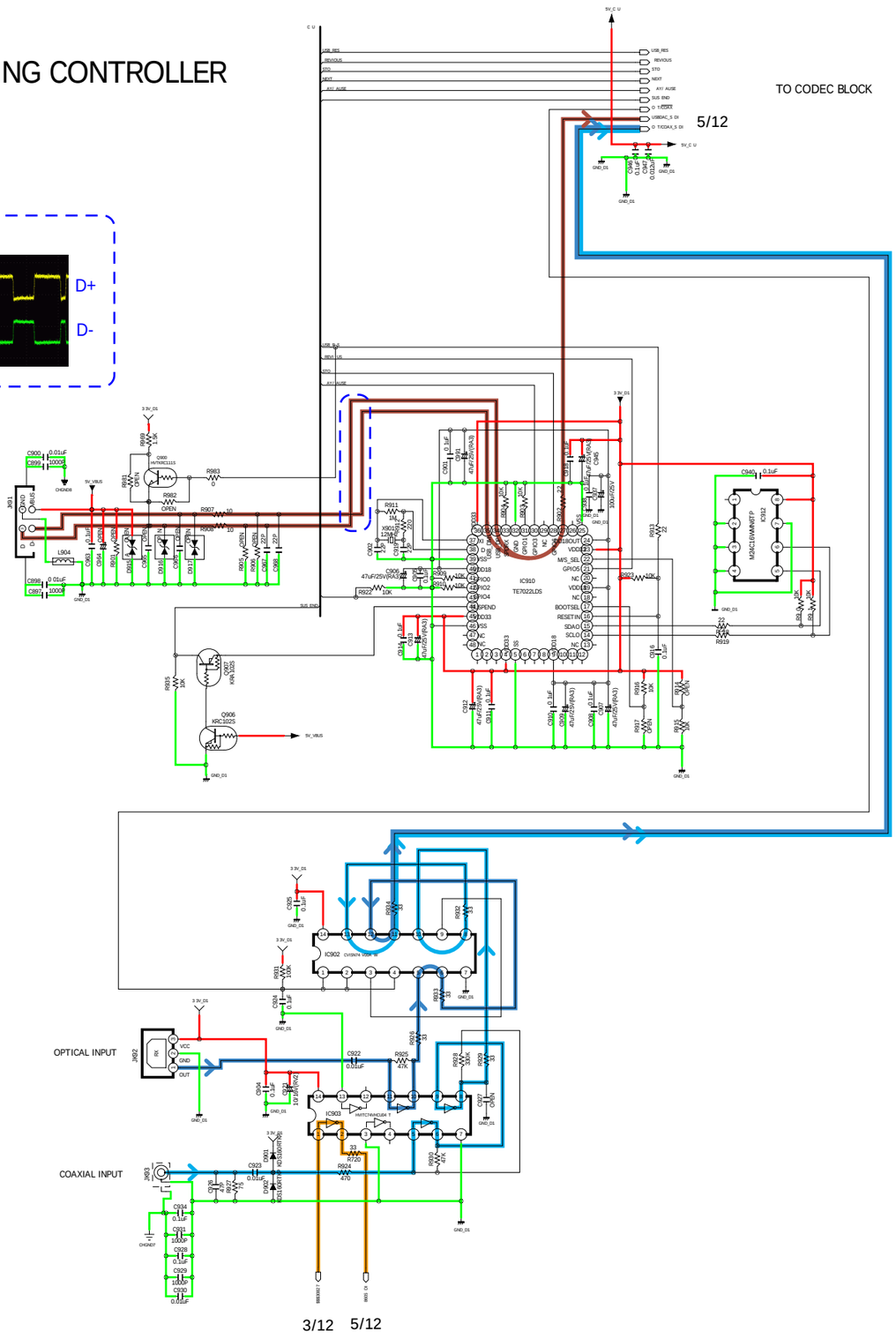

3/12 5/12

GND POWER + POWER -

SCHEMATIC DIAGRAMS (2/12)

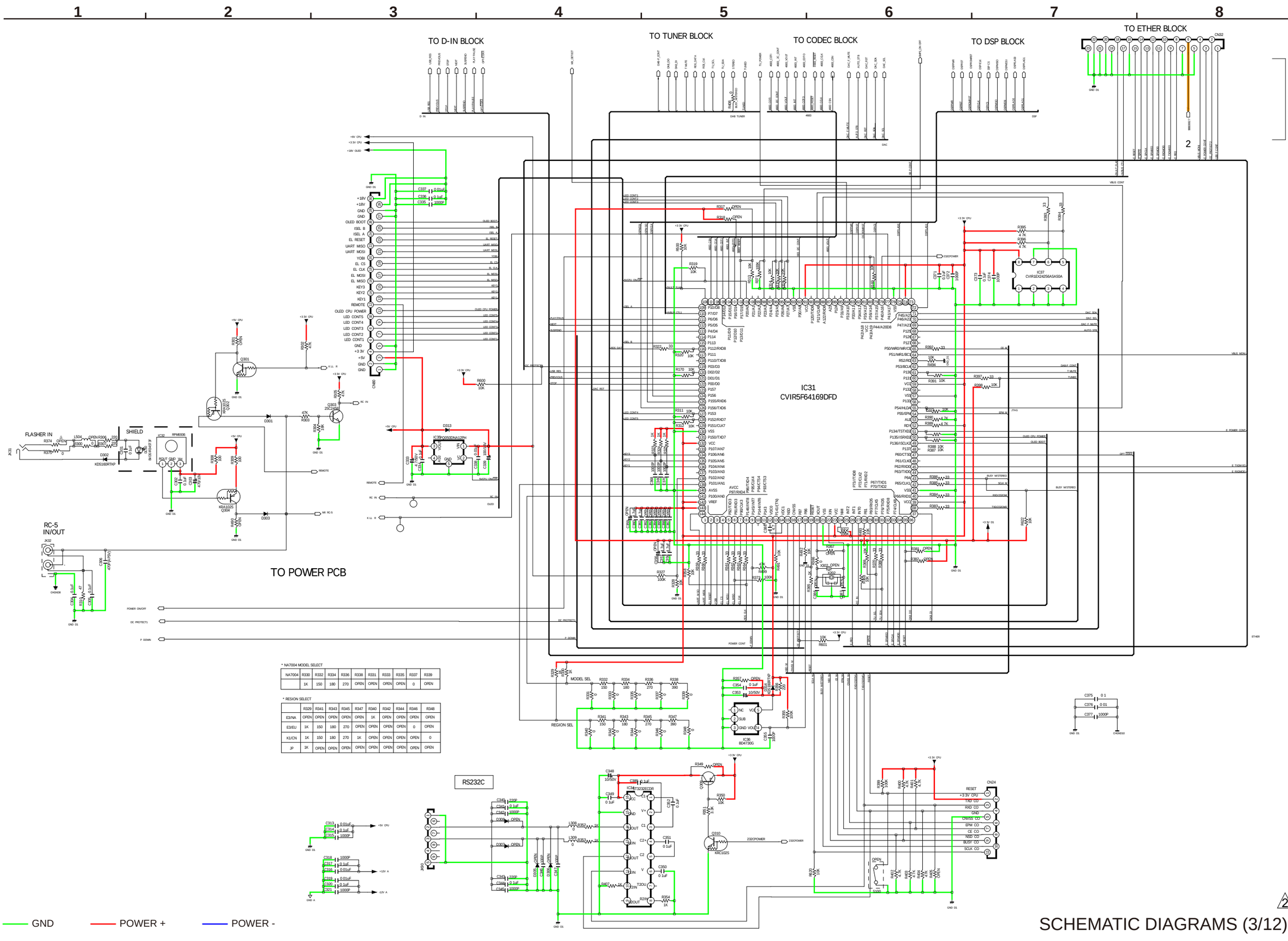

* NA7004 MODEL SELECT

NA7004	R330	R332	R334	R336	R338	R331	R333	R335	R337	R339
	1K	150	180	270	OPEN	OPEN	OPEN	OPEN	0	OPEN

* RESION SELECT

	R329	R341	R343	R345	R347	R340	R342	R344	R346	R348
E3/NA	OPEN	OPEN	OPEN	OPEN	OPEN	1K	OPEN	OPEN	OPEN	OPEN
E3/EU	1K	150	180	270	OPEN	OPEN	OPEN	OPEN	0	OPEN
K1/CN	1K	150	180	270	1K	OPEN	OPEN	OPEN	OPEN	0
JP	1K	OPEN	OPEN	OPEN	OPEN	OPEN	OPEN	OPEN	OPEN	OPEN

SCHEMATIC DIAGRAMS (3/12)

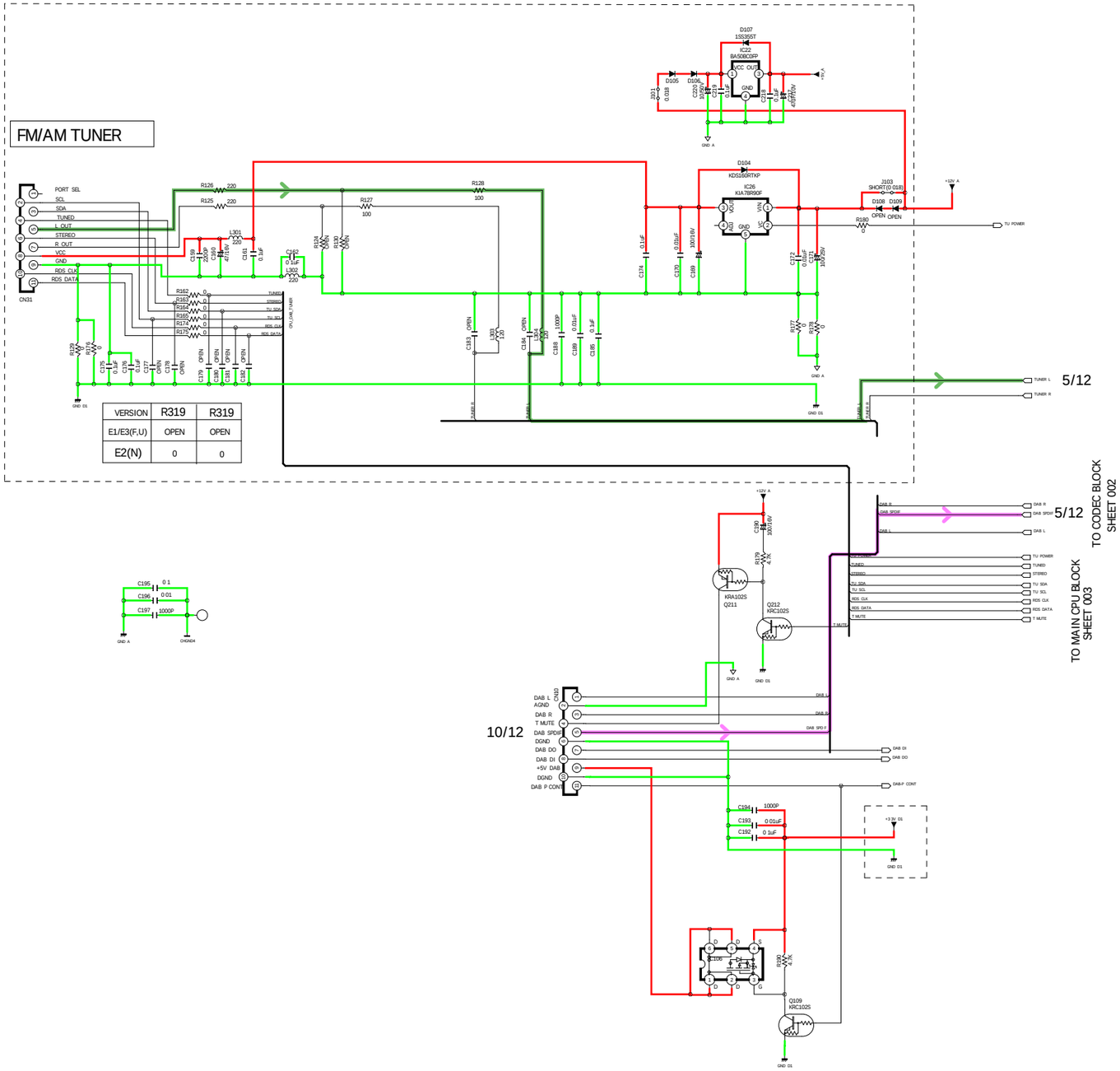

GND POWER + POWER -

SCHEMATIC DIAGRAMS (4/12)

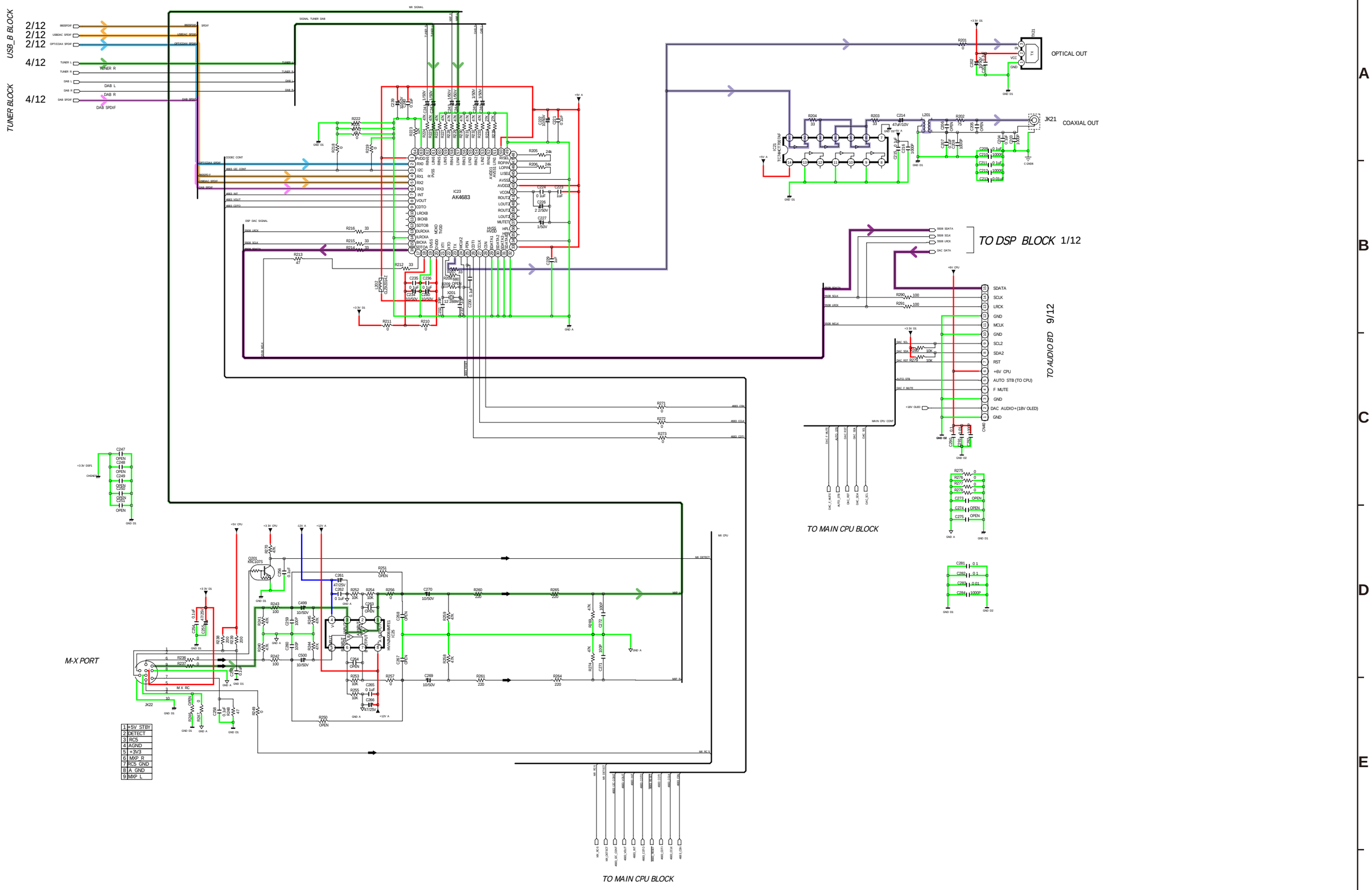
USB_B BLOCK
TUNER BLOCK
2/12
2/12
2/12
4/12
4/12
TUNER R
DAB L
DAB R
DAB SPDIF
IC23
AK4683
OPTICAL OUT
JK21
COAXIAL OUT
TO DSP BLOCK 1/12
TO AUDIO BD 9/12
SDATA
SCLK
LRCK
GND
MCLK
SCL2
SDA2
RST
+6V CPU
AUTO STB (TO CPU)
F MUTE
DAC AUDIO+(18V OLED)
TO MAIN CPU BLOCK
TO MAIN CPU BLOCK
M-X PORT
JK22
1 +5V_STBY
2 DETECT
3 RCS
4 AGND
5 +3V3
6 MXP_R
7 RCS_GND
8 A_GND
9 MXP_L
GND
POWER +
POWER -
SCHEMATIC DIAGRAMS (5/12)

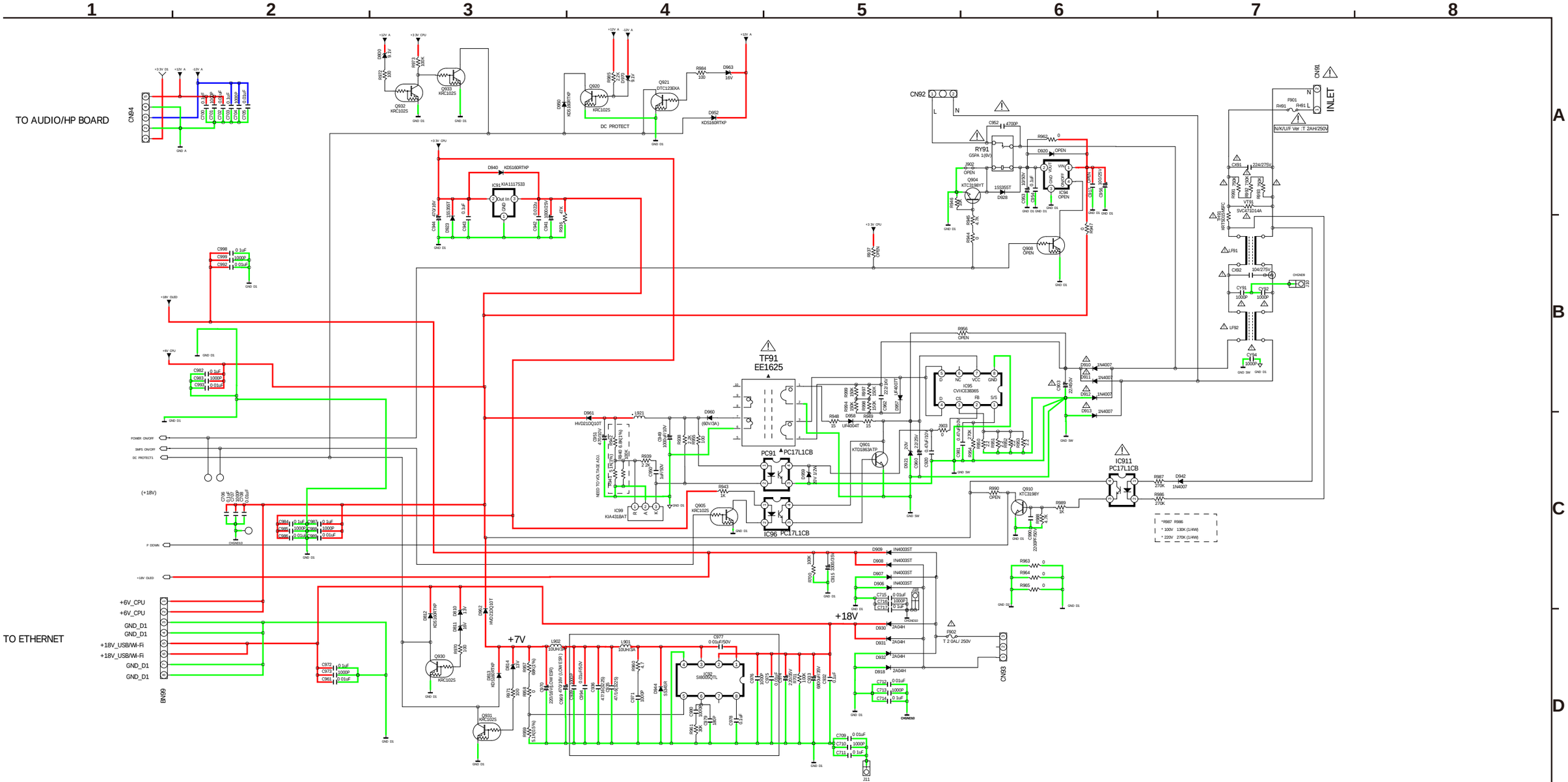

GND POWER + POWER -

SCHEMATIC DIAGRAMS (6/12)

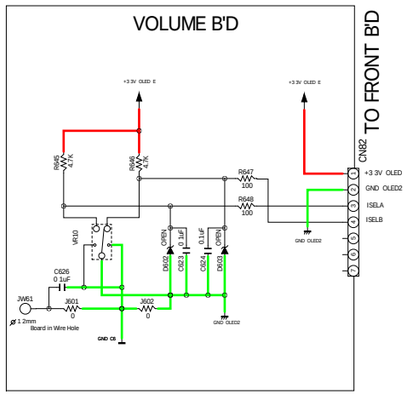

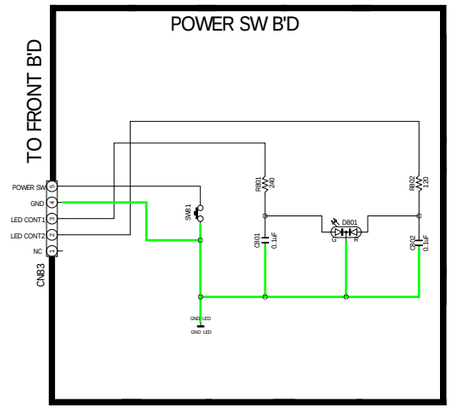

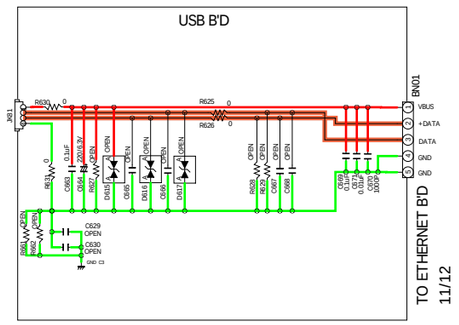

GND POWER + POWER -

SCHEMATIC DIAGRAMS (7/12)

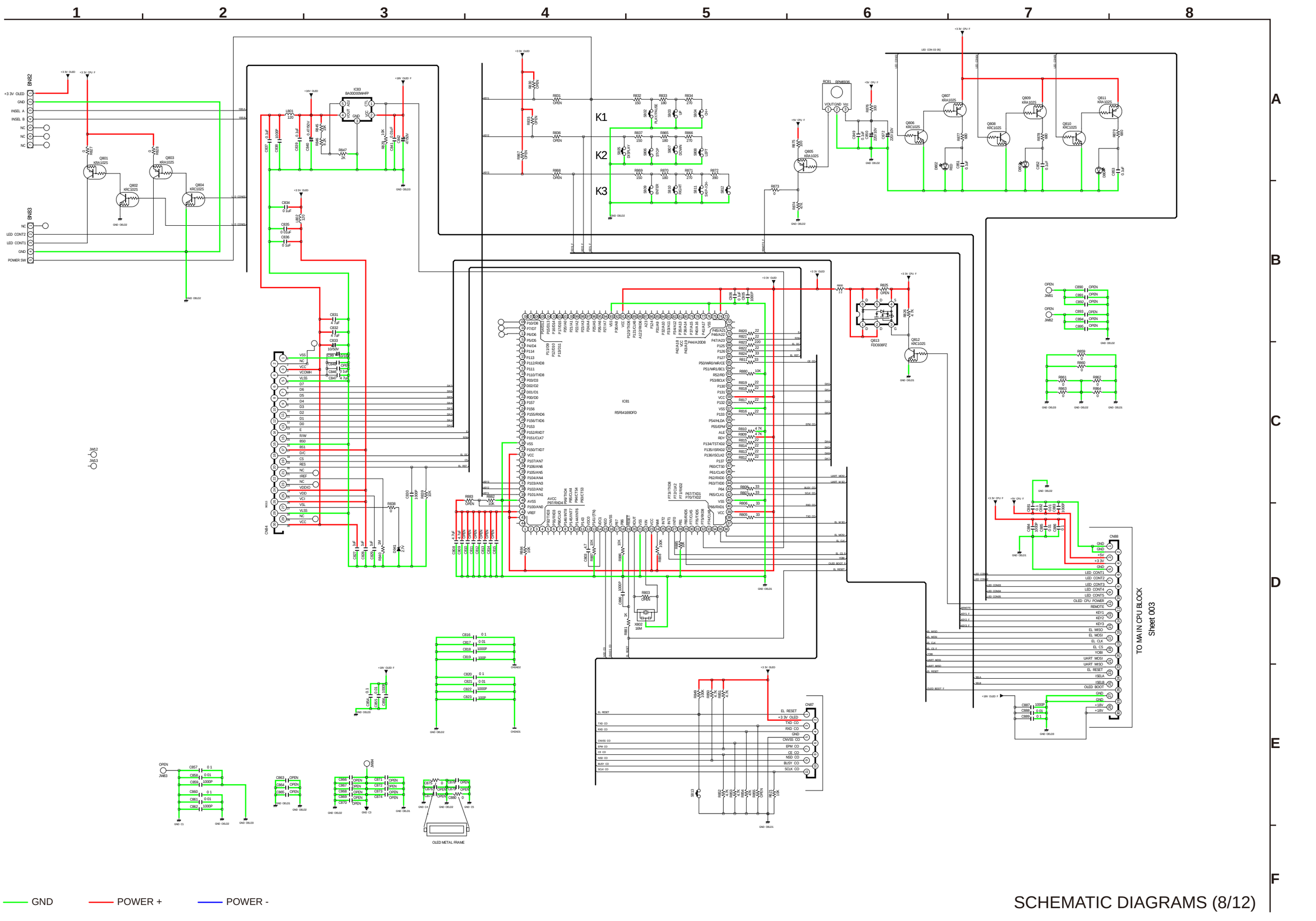

SCHEMATIC DIAGRAMS (8/12)

AUDIO OUTPUT

TO MAIN BOARD

BN42

5/12 SDATA
SCLK
LRCK
GND
MCLK
GND
SCL2
SDA2
RST
+6V_CPU
AUTO_STB
F_MUTE
GND
DAC_AUDIO+
GND

BN43

AUDIO+
GND
AUDIO-
GND
+3.3V_D1

IC75 KIA7812AP/P
IC76 KIA7805AP/P
IC77 KIA1117/33
IC73 CS4398CZ

SDATA
SCLK
LRCK
MCLK

JK71 R CHANNEL
JK61 L CHANNEL
CN71 (NC)
CN61 (NC)

F_MUTE
+6V CPU
AUD O+
+3V D1
AUDIO+
AUDIO-
+5VA
+12V
HP-L
HP-R

FROM POWER TRANS S1 CN94
AC12.6V
GND
AC12.6V

TO H/P JACK BOARD
CN81
HP_L_IN
GND
HP_L_VR_OUT
HP_R_IN
GND
HP_R_VR_OUT
HP_R_CH
GND
HP_L_CH

R CH
L CH

IC81 NJM2068MTE1

TO HDAM/HP BOARD
BN81
HP_L_IN
GND
HP_L_VR_OUT
HP_R_IN
GND
HP_R_VR_OUT
HP_R_CH
GND
HP_L_CH

VR81 CVV3203A1032

WAVEFORMS

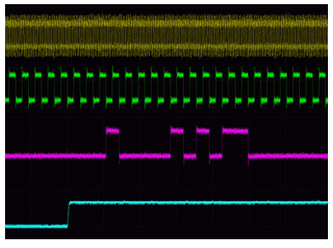

GND
POWER +
POWER -

SCHEMATIC DIAGRAMS (9/12)

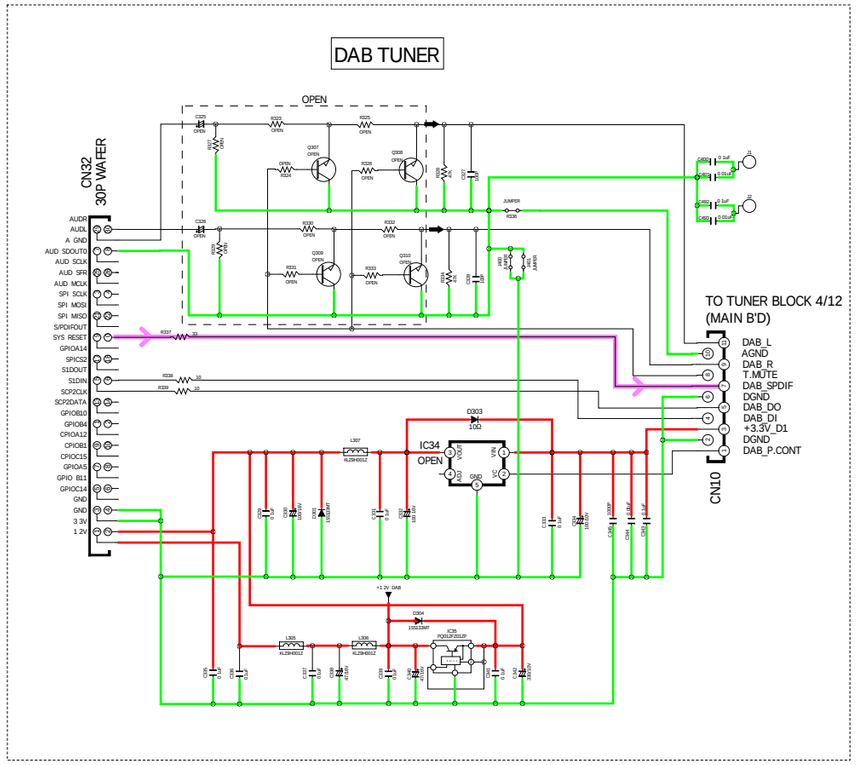

GND POWER + POWER -

SCHEMATIC DIAGRAMS (10/12)

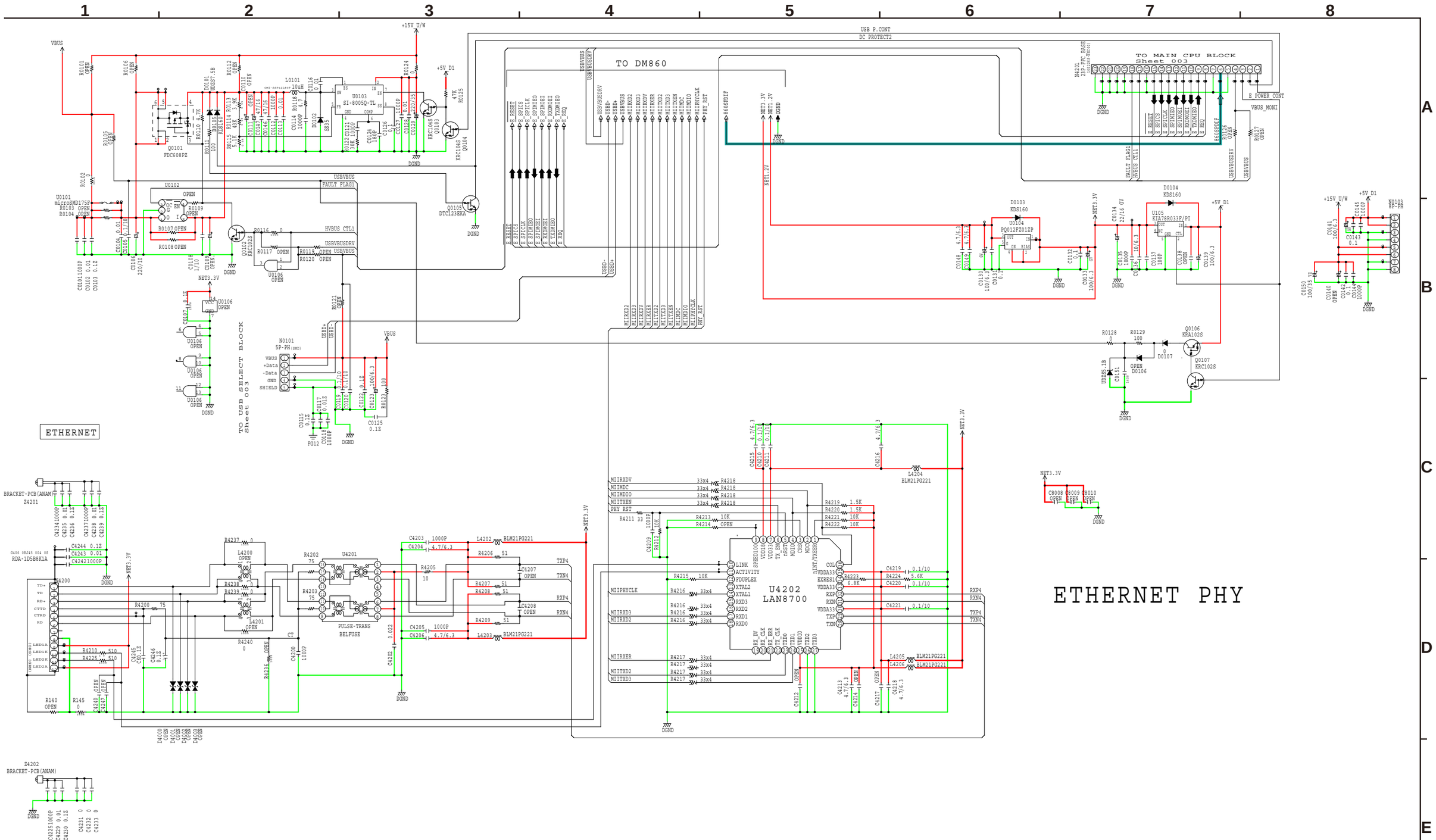

GND POWER + POWER -

SCHEMATIC DIAGRAMS (11/12)

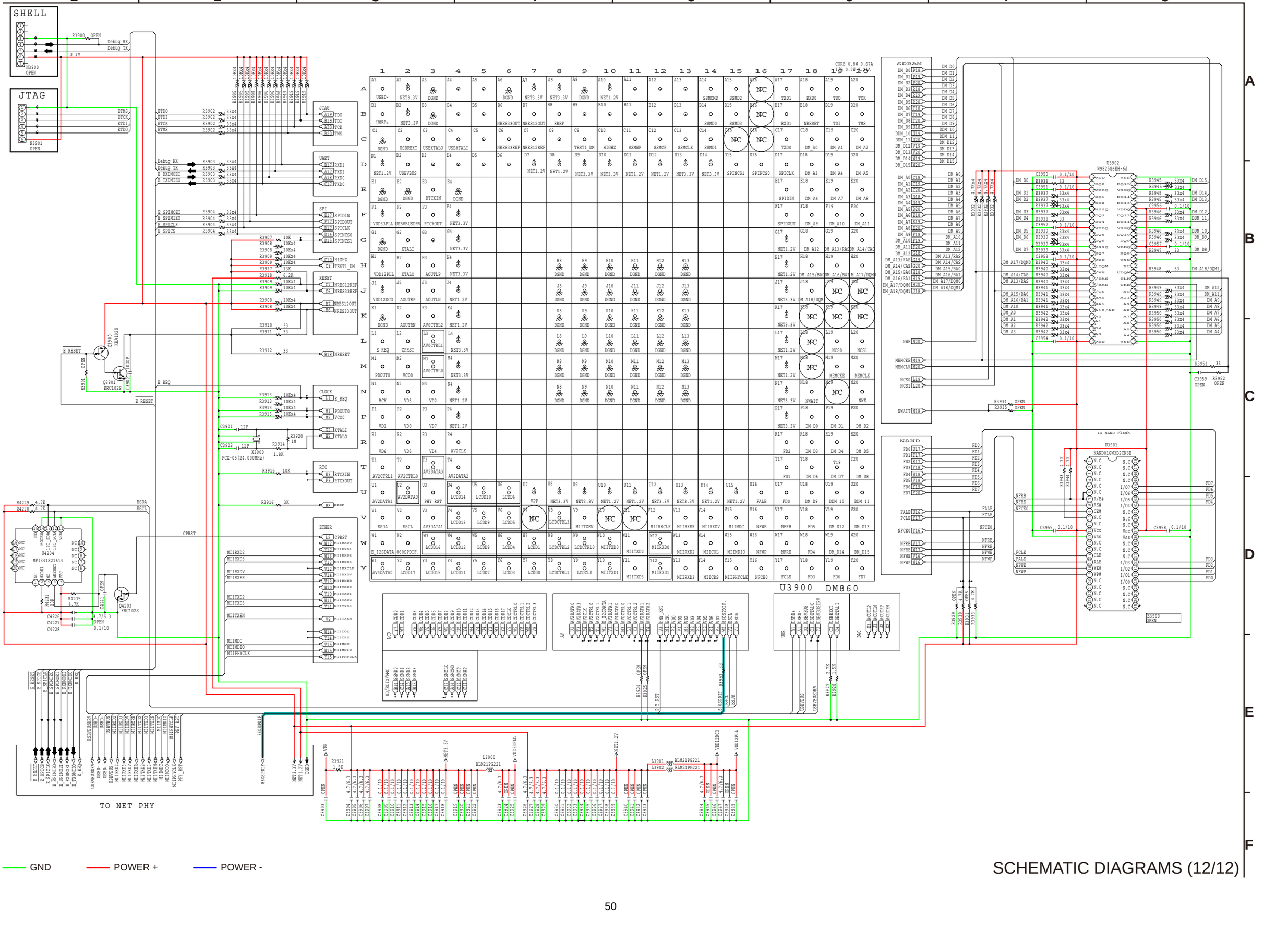
SHELL
JTAG
U3900 DM860
SDRAM
NAND
U3902
W98250GBR-6J
U3901
NAND01GW3B2CN6
1G NAND Flash
U4204
MF1341S21614
Q3900 KRA102S
Q3901 KRC102S
Q4203 KRC102S
X3900
FCX-05(24.000MHz)
TO NET PHY
GND
POWER +
POWER -
SCHEMATIC DIAGRAMS (12/12)

EXPLODED VIEW

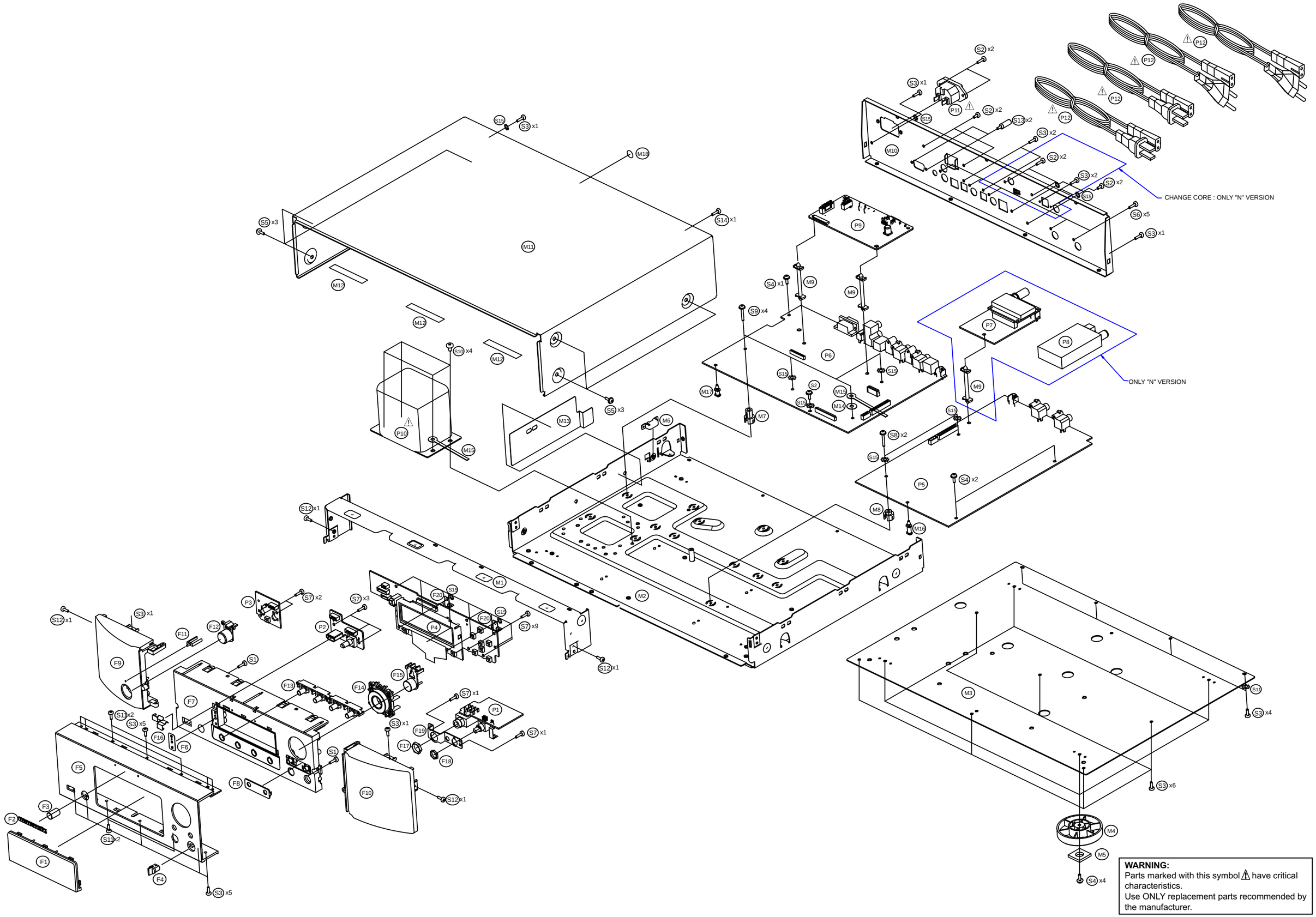

PARTS LIST OF EXPLODED VIEW

＊Parts for which "nsp" is indicated on this table cannot be supplied.
＊P.W.B. ASS'Y for which "nsp" is indicated on this table cannot be supplied. When repairing the P.W.B. ASS'Y, check the board parts table and order replacement parts.
＊Part indicated with the mark " ★ " is not illustrated in the exploded view.
＊The parts listed below are for maintenance only, might differ from the parts used in the unit in appearances or dimensions.

Note: The symbols in the column "Remarks" indicate the following destinations.
U : North America model　　N : Europe model　　K : China model
B : Black model　　SG : Silver gold model

	Ref. No.	Part No.	Part Name	Remarks		Q'ty	New
	P1A	nsp	AUDIO PCB UNIT ASSY	N	COP12343B	1	
	P1A	nsp	AUDIO PCB UNIT ASSY	K,U,	COP12343C	1	
	P1	-	PHONE PCB ASSY		-		
	P5	-	AUDIO PCB ASSY		-		
	P7	-	DAB PCB ASSY	N	-		
	P2A	nsp	MAIN PCB UNIT ASS'Y	N	COP12342B	1	
	P2A	nsp	MAIN PCB UNIT ASS'Y	K	COP12342D	1	
	P2A	nsp	MAIN PCB UNIT ASS'Y	U	COP12342E	1	
	P2	-	USB PCB ASSY		-		
	P3	-	STANDBY PCB ASSY		-		
	P4	-	DISPLAY PCB ASSY		-		
	P6	-	MAIN PCB ASSY		-		
	P8	943183009250S	MODULE , TUNER (EUR)	N	CNVMT104MS1-80A	1	
	P9	8R1821000200S	ETHER MAC PCB ASS'Y		COP12318B	1	
⚠	P10	943101011080M	TRANS , POWER(EUROPE)	N	CLT5O001ZE	1	*
⚠	P10	943101011110M	TRANS , POWER(CHINA)	K	CLT5O001ZH	1	*
⚠	P10	943101011090M	TRANS , POWER(USA)	U	CLT5O001ZU	1	*
⚠	P11	00MYJ04002640	RECEPTACLE , AC(15A/250V,R-301,B21)		CJJ8A006ZW	1	
⚠	P12	90M-ZC000320R	CORD , POWER(DETACHABLE/EUR)	N	CJA2B054Z	1	
⚠	P12	90M-ZC000650R	CORD , POWER	K	CJA2N075Z	1	
⚠	P12	90M-ZC000310R	CORD , POWER(PLUG+SOCKET)UL	U	CJA2A070Z	1	
	F1	943416011990M	WINDOW		CGU1A465A32Z	1	*
	F2	421410006004M	BADGE , MARANTZ		CGB1A206	1	
	F3	943412012000M	KNOB , ROTARY	B	CBN1A253	1	*
	F3	943412012010M	KNOB , ROTARY	SG	CBN1A253RMD10	1	*
	F4	943411007050M	KNOB , LEVEL	B	CBN1A170B37	1	
	F4	00M24AW154120	KNOB , LEVEL	SG	CBN1A170RMD10	1	
	F5	943402011040M	PANEL , AL FRONT	N1B	CKM1A238WC23	1	*
	F5	943402011060M	PANEL , AL FRONT	U1B,K1B	CKM1A238YC23	1	*
	F5	943402011050M	PANEL , AL FRONT	N1SG	CKM1A238XC62	1	*
	F6	nsp	SHEET , LED			1	*
	F7	943409012020M	PANEL , SUB	B	CGW1A508B37	1	*
	F7	943409012030M	PANEL , SUB	SG	CGW1A508RMZD10	1	*
	F8	nsp	GUIDE, BUTTON	B	CGW1A508B37-A	1	*
	F8	nsp	GUIDE, BUTTON	SG	CGW1A508RMZD10-A	1	*
	F9	402510115005M	PANEL , SIDE L	B	CGW2A463RNVB37	1	
	F9	402510115036M	PANEL , SIDE L	SG	CGW2A463ROUD10	1	
	F10	943402012040M	PANEL , SIDE R	B	CGW2A464RNB37	1	*
	F10	943402012050M	PANEL , SIDE R	SG	CGW2A464ROD10	1	*
	F11	481510003006M	INDICATOR , POWER		CGL1A274	1	
	F12	411510015017M	KNOB , POWER	B	CBT1A1072	1	
	F12	411510021036M	KNOB , POWER	SG	CBT1A1072RMD10	1	
	F13	943411012060M	BUTTON , PLAY	B	CBT1A1149	1	*
	F13	943411012070M	BUTTON , PLAY	SG	CBT1A1149RMD10	1	*
	F14	943411012080M	BUTTON , CURSOR	B	CBT1A1151Y	1	*
	F14	943411012090M	BUTTON , CURSOR	SG	CBT1A1151RMZD10	1	*

	Ref. No.	Part No.	Part Name	Remarks		Q'ty	New
	F15	943411012100M	BUTTON , ENTER	B	CBT1A1150Y	1	*
	F15	943411012110M	BUTTON , ENTER	SG	CBT1A1150RMZD10	1	*
	F16	nsp	PLATE , USB EARTH		CMC1A417	1	*
	F17	nsp	NUT , PHONE		CNE1A013	1	
	F18	nsp	NUT		-	1	
	F19	nsp	BRACKET , PHONE		CMD1A677	1	
	F20	nsp	PLATE , EARTH		CMC1A411	2	
	M1	nsp	FRAME , FRONT		CUF2A004	1	
	M2	nsp	CHASSIS , BOTTOM		CUA3A289	1	*
	M3	nsp	PLATE , BOTTOM		CUA1A325	1	*
	M4	00M243W057210	FOOT , FRONT		CKL2A042H46	4	
	M5	00M32CW107010	CUSHION , FOOT		CHG1A360	4	
	M6	nsp	COVER , SCREW		CMD1A495	1	
	M7	nsp	HOLDER , PCB		CHE2A030	4	
	M8	nsp	HOLDER , PCB		CHE170	2	
	M9	nsp	SUPPORT , PCB	N	CRE1A074	3	
	M9	nsp	SUPPORT , PCB	K ,U	CRE1A074	2	
	M10	nsp	PANEL , REAR	N	CKF1A441Z	1	*
	M10	nsp	PANEL , REAR	K	CKF2A441W	1	*
	M10	nsp	PANEL , REAR	U	CKF2A441Y	1	*
	M11	401310003002M	CABINET , TOP	B	CKC2A187K117	1	
	M11	401310003033M	CABINET , TOP	SG	CKC2A187D11	1	
	M12	nsp	TAPE , HEMELON		CHS1A032	3	
	M13	nsp	SHEET , PROTECT		CMX1A288	1	
	M14	nsp	WASHER , POLY(10*3.2*0.3)		CNW1A033	1	
	M15	nsp	CLAMPER , WIRE		CHE36-3	2	
	M16	nsp	SUPPORT , PCB(DCBS-9)		CRE1A099	1	
	M17	nsp	SUPPORT , PCB(DCBS-12)		CRE1A100	1	
	M18	nsp	SHEET , SCREW		CGX1A439	1	
	★ 1	943606012120S	CABLE , CARD (1.25MM, 11P, 250MM, A TYPE)		CWC4F4A11B250A08	1	
	★ 2	943606012130S	CABLE , CARD(1.0MM, 23P, 180MM, B TYPE)		CWC4F4A23A180B08	1	
	★ 3	943606012140S	CABLE , CARD(1.0MM, 30P, 250MM, B TYPE)		CWC4F4A30A250B08	1	
	★ 4	nsp	2P WIRE ASS'Y(100MM)		CWZPM5003TW91A	1	
SCREWS							
	S1	nsp	SCREW		CTB3+8JR	2	
	S2	nsp	SCREW	N	CTB3+6FFB	11	
	S2	nsp	SCREW	K ,U	CTB3+6FFB	7	
	S3	nsp	SCREW		CTB3+8JFB	27	
	S4	nsp	SCREW		CTW3+8JR	7	
	S5	nsp	SCREW	B	CTW3+8JFZR	6	
	S5	nsp	SCREW	SG	CTW3+8JFC	6	
	S6	nsp	SCREW		CTB3+10JFB	7	
	S7	nsp	SCREW		CTB3+10JR	16	
	S8	nsp	SCREW		CTW3+12JR	2	
	S9	nsp	SCREW		CTW3+18JR	4	
	S10	nsp	SCREW		CTB4+6FR	4	
	S11	nsp	SCREW , DOT		CTBD3+8JFB	4	
	S12	nsp	SCREW		CTB3+6JR	4	
	S13	nsp	SCREW		-	2	
	S14	nsp	SCREW		CTW3+8JFR	1	
	S15	nsp	WASHER , GROUND		CNW1A035	12	

PACKING VIEW

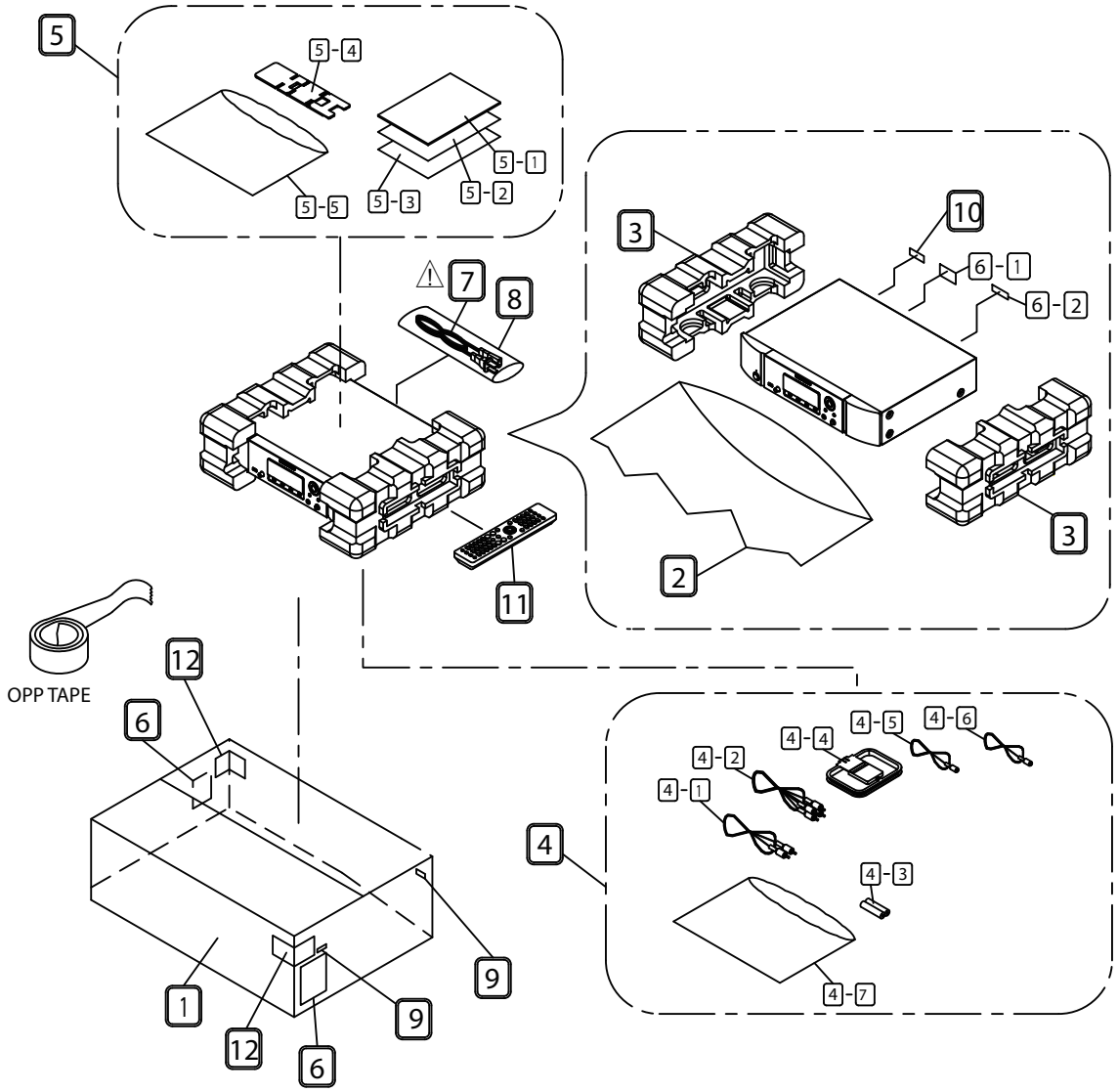

PARTS LIST OF PACKING & ACCESSORIES

✻Parts for which "nsp" is indicated on this table cannot be supplied.

✻The parts listed below are for maintenance only, might differ from the parts used in the unit in appearances or dimensions.

✻Part indicated with the mark " ★ " is not illustrated in the exploded view.

Note: The symbols in the column "Remarks" indicate the following destinations.

U : North America model N : Europe model K : China model

B : Black model SG : Silver gold model

	Ref. No.	Part No.	Part Name	Remarks		Q'ty	New
	1	531210164007M	BOX , OUT CARTON		CPG1A870R	1	*
	2	nsp	BAG, POLY(SET)		CPP1A081X	1	
	3	943533002300M	PAD, SNOW		CPS1A821	2	
	4	nsp	ACCESSORIES ASSY		-		
	4-1	90M-ZD000440R	CORD, PIN(1P)		CJS4M009X	1	
	4-2	90M-ZD000510R	CORD, PIN(2P)		CJS4N014Z	1	
	4-3	nsp	BATTERY, AAA		CABR03PPB	2	
	4-4	90M-ZA000240R	ANT, AL LOOP	N	CSA1A020Z	1	
	4-5	90M-ZA000220R	FM 1 POLE ANT	N	CSA1A018Z	1	
	4-6	943429007990S	ANT, DAB	N	CSA1A036Z	1	
	4-7	nsp	BAG, POLY(MANUAL)		CPB1A197Z	1	
	5	nsp	MANUAL ASSY		-		
	5-1	541110516002M	MANUAL, INSTRUCTION	N	CQX1A1572Z	1	*

	Ref. No.	Part No.	Part Name	Remarks		Q'ty	New
	5-1	541110518008M	MANUAL, INSTRUCTION	K	CQX1A1573Z	1	*
	5-1	541110515009M	MANUAL, INSTRUCTION	U	CQX1A1574Z	1	*
	5-2	nsp	CARD FOR CHINA INDENTIFICATION	K	CQE1A450Z	1	
	5-2	nsp	CARD , WARRANTY	U	CQE1A131W	1	
	5-3	nsp	WARRANTY CARD CHINA	K	CQE1A449Z	1	
	5-3	nsp	WARRANTY CANADA	U	CQE1A132V	1	
	5-4	nsp	IPOD STAND ASS'Y		CMH1A310ZA	1	
	5-5	nsp	BAG, POLY(MANUAL)		CPB1A197Z	1	
	6	nsp	LABEL, CONTROL		CQB1A993Z	1	
	6-1	nsp	LABEL, BAR CODE		CQB1A993Z-1	1	
	6-2	nsp	LABEL, PRODUCTION YEAR	K, U	CQB1A993Z-2	1	
⚠	7	90M-ZC000320R	CORD, POWER	N	CJA2B054Z	1	
⚠	7	90M-ZC000650R	CORD, POWER	K	CJA2N075Z	1	
⚠	7	90M-ZC000310R	CORD, POWER	U	CJA2A070Z	1	
	8	nsp	BAG, POLY		CPB1A008Z	1	
	9	nsp	LABEL, LAST FM		CQB1A1025Z	1	
	10	nsp	LABEL, MAC ADRESS		CQB1A995	2	
	11	307010081004M	REMOCON TRANSMITTER ASS'Y		CARTNA7004	1	*
	12	nsp	LABEL, WHITE M1	SG	CQB1A908Z	2	

SEMICONDUCTORS

Only major semiconductors are shown, general semiconductors etc. are omitted to list.
The semiconductor which described a detailed drawing in a schematic diagram are omitted to list.

1. IC's

R5F64169DFD (MAIN : IC31, DISPLAY : IC81)

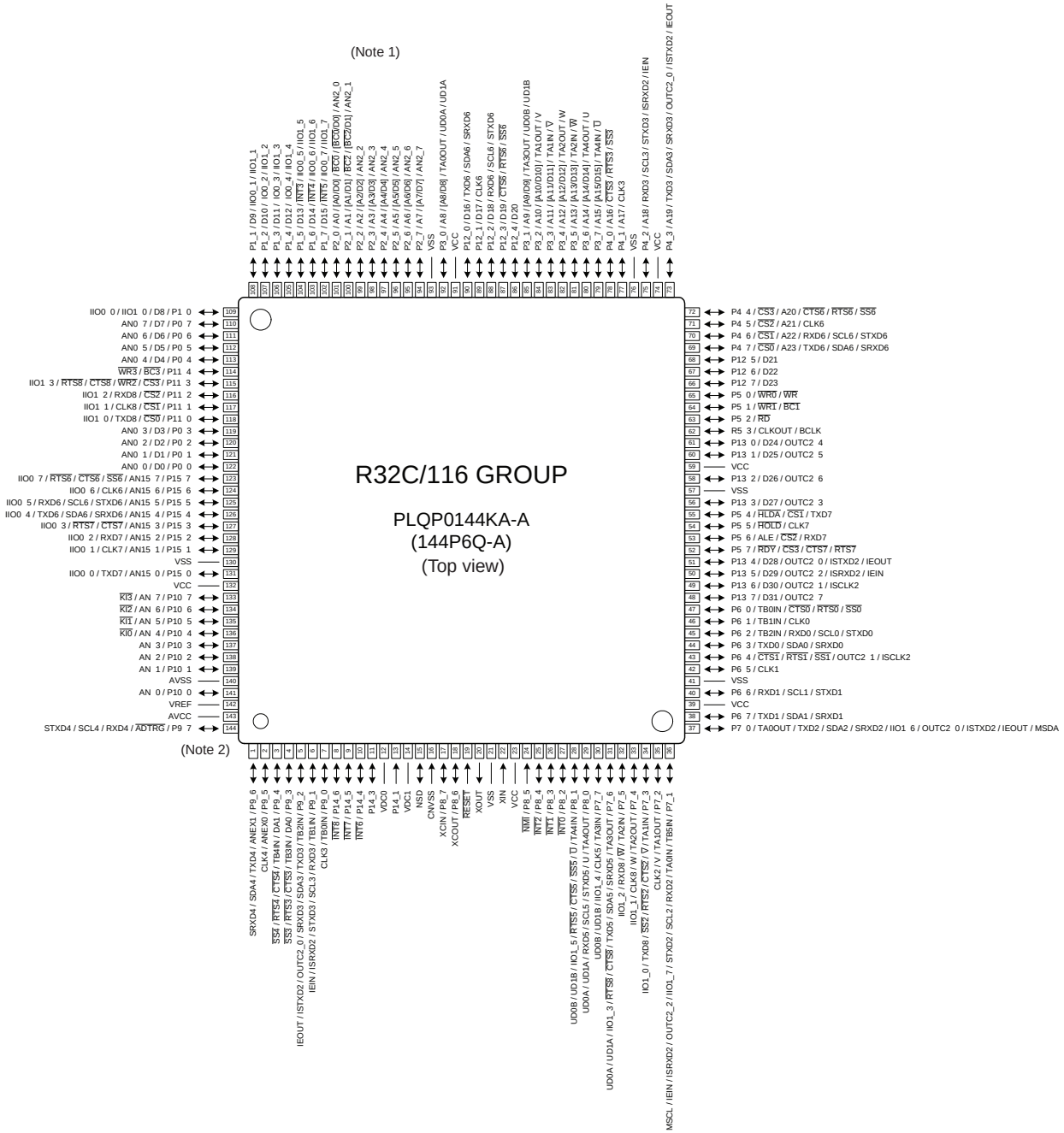

Notes:
1. Pin names in brackets [ ] represent a functional signal as a whole and should not be considered as two separate pins.
2. The position of pin number 1 varies by product. Refer to the index mark in attached “Package Dimensions”.

R5F64169DFD (MAIN : IC31) Terminal Function

Pin	Pin Name	Port Name	PD/PU	I/O	STANDBY MODE			NOTE
					STANDBY	Network STANDBY	232C STANDBY	
1	P96/(TXD4)	UART_MOSI	-	O	O/L	O/L	O/L	Transfer Data for Display ucom at Updating
2	(P95)/CLK4	EL_RESET	PD	O	O/L	O/L	O/L	Reset for Display ucom
3	P94/(CTS4)	YOBI	-	-	-	-	-	Not Use
4	P93/(CTS3)	EL_CS	-	O	O/L	O/L	O/L	Chip Select of Display Data for Display ucom
5	P92/TXD3	EL_MOSI	-	O	O/L	O/L	O/L	Display Data for Display ucom
6	P91/RXD3	EL_MISO	PD	I	I	I	I	Display Data from Display ucom
7	P90/(CLK3)	EL_CLK	-	O	O/L	O/L	O/L	Clock of Display Data for Display ucom
8	(P146)/INT8	RDS_CLK	PD	I	I	I	I	RDS Clock input(interrupt)
9	P145/INT7	P_DOWN	PU	I	I	I	I	Power Down Detect
10	P144/INT6	NC	-	O	O/L	O/L	O/L	NC
11	P143	NC	-	O	O/L	O/L	O/L	NC
12	VDC0	VDC0	-	-	-	-	-	Smoothing capacitor connection terminal
13	P141 (INPUT ONLY)	CHECK-1	PD	I	I	I	I	NC
14	VDC1	VDC1	-	-	-	-	-	Smoothing capacitor connection terminal
15	NSD	NSD_M	PU	-	-	-	-	Emulator communication pin
16	CNVSS	CNVSS	PD	-	-	-	-	Single-chip / Micro-processor mode switching (Normal single-chip : L, Rewrite boot program start : H input set)
17	P87/(XCIN)	DC_PROTECT1	PU	I	I	I	I	Power Protection Detect for USB
18	P86/(XCOUT)	CHECK-2	PD	-	-	-	-	NC
19	RESET	RESET	PU	-	-	-	-	Reset
20	XOUT	X2	-	-	-	-	-	Clock(Output)
21	VSS	VSS	-	-	-	-	-	GND
22	XIN	X1	-	-	-	-	-	Clock(Input)
23	VCC	VCC1	-	-	-	-	-	+3V
24	P85/NMI	NMI	H	O	O/L	O/L	O/L	NC
25	P84/INT2	NC	-	O	O/L	O/L	O/L	NC
26	P83/INT1	E_REQ	PD	I	I	I	I	DM870/860 Interrupt
27	P82/INT0	RC_IN	PU	I	I	I	I	IR Interrupt
28	P81	CHECK-3	PD	-	-	-	-	NC
29	P80/RXD5	/E_SPICS	PU	O	O/L	O/L	O/L	DM870/860 SCI Chip Select
30	(P77)/CLK5	TU_SCL	PU	O	O/L	O/L	O/L	Clock for TUNER (I2C)
31	(P76)/TXD5	TU_SDA	PU	O	O/L	O/L	O/L	Data for TUNER (I2C)
32	P75/RXD8	E_SPIMIEO	PU	I	I	I	I	Data from ETHERNET (SPI)
33	P74/CLK8	E_SPICLK	PU	O	O/L	O/L	O/L	Clock for ETHERNET (SPI)
34	P73/TXD8	E_SPIMOEI	PU	O	O/L	O/L	O/L	Data for ETHERNET (SPI)
35	P72/CLK2	/E_RESET	PU	O	O/L	O/L	O/L	DM870/860 Reset
36	P71/RXD2/ (MSCL)	DAB_DO	-	SI	I	I	I	Data from DAB (TX)
37	P70/TXD2/ (MSDA)	DAB_DI	-	SO	O/L	O/L	O/L	Data for DAB (RX)
38	P67/TXD1	TXD/232CMO	-	SO	O/L	O/L	O/L	Data transfer to external terminal(AMX)/MITSUBISHI writer
39	VCC	VCC1	-	-	-	-	-	+3V
40	P66/RXD1	RXD/232CMI	PD	SI	O/L	I	O/L	Data received from the external terminal(AMX)/MITSUBISHI writer
41	VSS	VSS	-	-	-	-	-	GND
42	P65/CLK1 /SCLK(L)	SCLK_M	PD	O	O/L	O/L	O/L	Writing Mode Select
43	P64/BUSY	BUSY_M /STEREO	-	I	I	I	I	STREO Indicator input/BUSY at Updating
44	P63/TXD0	E_RXDMOEI	PU	SO	O/L	O/L	O/L	Network Serial Data Output DM870/860 RXD)
45	P62/RXD0	E_TXDMIEO	PU	SI	O/L	I	O/L	Network Serial Data Input (DM870/860 TXD)
46	P61/CLK0	NC	-	O	O/L	O/L	O/L	NC
47	P60/CTS0	OPT/COAX	PU	SO	O/L	O/L	O/L	Digital In Select
48	P137	NC	-	O	O/L	O/L	O/L	NC
49	P136/ISCLK2	OLED_BOOT	PD	O	O/L	O/L	O/L	Boot for Display ucom
50	P135/ISRXD2	OLED_CPU_POWER	PD	O	O/L	O/L	O/L	Power Control for Display ucom
51	P134/ISTXD2	E_POWER_CONT	PD	O	O/L	O/H	O/L	Power Control for DM870/860
52	P57/RDY	RDY	PU	I	I	I	I	NC
53	P56/ALE	ALE	PD	O	O/L	O/L	O/L	NC
54	P55/HOLD /EPM	EPM_M	PU	I	I	I	I	Rewrite boot program start : L input set
55	P54/HLDA	TU_POWER	PD	O	O/L	O/L	O/L	Power Control for TUNER
56	P133	NC	-	O	O/L	O/L	O/L	NC
57	VSS	VSS	-	-	-	-	-	GND

Pin	Pin Name	Port Name	PD/PU	I/O	STANDBY MODE			NOTE
					STANDBY	Network STANDBY	232C STANDBY	
58	P132	NC	-	O	O/L	O/L	O/L	NC
59	VCC	VCC2	-	-	-	-	-	+3V
60	P131	TUNED	PU	I	I	I	I	Tuned
61	P130	T.MUTE	PD	O	O/L	O/L	O/L	Mute for TUNER
62	P53/BCLK	DAB-P_CONT	PD	O	O/L	O/L	O/L	Power Control for DAB
63	P52/RD	CHECK-4	PD	I	I	I	I	NC
64	P51/(WR1) /BC1	VBUS_MONI	PD	O	O/L	O/L	O/L	USB Data Output Enable RCD-N7)
65	P50/(WR0) /WR/CE	CE_M	PD	I	I	I	I	Rewrite boot program start : H input set
66	P127	NC	-	O	O/L	O/L	O/L	NC
67	P126	NC	-	O	O/L	O/L	O/L	NC
68	P125	AUTO_STB	PU	I	I	I	I	DAC OUTPUT Zero Detect
69	P47/CS0 /(A23)	/F_MUTE	PD	O	O/L	O/L	O/L	TAS5508 Soft mute of outputs
70	P46/(CS1) /A22	DAC_SCL	PU	I/O	I	I	I	DAC Control (SCL)
71	P45/(CS2) /A21	DAC_SDA	PU	I/O	I	I	I	DAC Control (SDA)
72	P44/(CS3) /A20	DSPFLAG1	PD	O	O/L	O/L	O/L	Not Used
73	P43/A19	USB_P.CONT	PD	O	O/L	O/L	O/L	USB Power Control
74	VCC	VCC	-	-	-	-	-	+3V
75	P42/A18	DSPFLAG0	PD	I	O/L	O/L	O/L	DSP Control (Flag Detect)
76	VSS	VSS	-	-	-	-	-	GND
77	P41/A17	KILL_IR	PU	O	O/H	O/H	O/H	Control terminal for Front IR Disable
78	P40/A16	232CPOWER	PD	O	O/L	O/L	O/H	RS-232C Power Control
79	P37/A15	DSPICS	PU	O	O/L	O/L	O/L	DSP Control (CS)
80	P36/A14	POWER_ON/OFF	PD	O	O/L	O/L	O/L	ON/STANDBY Control H:ON/L:STANDBY
81	P35/A13	DSPROMRST	PD	O	O/L	O/L	O/L	DSP Control (DSP ROM RESET)
82	P34/A12	DSPRST	PD	O	O/L	O/L	O/L	DSP Control (DSP RESET)
83	P33/A11	DSPPWR	-	O	O/L	O/L	O/L	Not Used
84	P32/A10	MX_DETECT	PU	I	I	I	I	M-XPort Detection
85	P31/A9	NC	-	O	O/L	O/L	O/L	NC
86	P124	NC	-	O	O/L	O/L	O/L	NC
87	P123	4683_VOUT	-	O	O/L	O/L	O/L	AK4683 VOUT Monitor
88	P122/(RXD6)	E2PROMSCL	PU	O	O/L	O/L	O/L	Serial Clock for EEPROM
89	P121/(CLK6)	E2PROMSDA	PU	I/O	O/L	O/L	O/L	Serial Data for EEPROM
90	P120/(TXD6)	NC	-	O	O/L	O/L	O/L	NC
91	VCC	VCC	-	-	-	-	-	+3V
92	P30/A8	4683_I2C_CONT	GND	O	O/L	O/L	O/L	AK4683 Communication format Select
93	VSS	VSS		-	-	-	-	GND
94	P27/A7	LED_CONT1	PD	O	O/L	O/H	O/L	LED Control1
95	P26/A6	LED_CONT2	PD	O	O/H	O/H	O/H	LED Control2
96	P25/A5	LED_CONT3	PD	O	O/L	O/L	O/L	LED Control (D-OUT)
97	P24/A4	NC	-	O	O/L	O/L	O/L	NC
98	P23/A3	SMPS_ON/OFF	PD	O	O/L	O/L	O/L	SMPS ON/OFF Control
99	P22/A2	NC	-	O	O/L	O/L	O/L	NC
100	P21/A1	NC	-	O	O/L	O/L	O/L	NC
101	P20/A0	5VCPU_ON//OFF	PD	O	O/H	O/H	O/H	5V Control
102	P17/D15	/4683_RESET	PD	O	O/L	O/L	O/L	AK4683 Reset Signal
103	P16/D14	4683_CDTO	-	I	I	I	I	AK4683 SCI Data Input
104	P15/D13	4683_INT	-	I	I	I	I	AK4683 Request Signal
105	P14/D12	4683_CDTI	-	O	O/L	O/L	O/L	AK4683 SCI Data Output
106	P13/D11	4683_CCLK	-	O	O/L	O/L	O/L	AK4683 SCI Clock
107	P12/D10	4683_CSN	-	O	O/H	O/H	O/H	AK4683 Chip Enable Signal
108	P11/D9	FAULT_FLAG1	PU	I	I	I	I	USB1 VBUS Current Limit Signal
109	P10/D8	ISEL_A	PU	I	I	I	I	INPUT JOG SIGNAL IN-A
110	P07/D7	HVBUS_CTL1	PD	O	O/L	O/L	O/L	USB1 VBUS Control
111	P06/D6	PLAY/PAUSE	-	O	O/L	O/L	O/L	Not Used
112	P05/D5	NEXT	-	O	O/L	O/L	O/L	Not Used
113	P04/D4	SUSPEND	PD	I	I	I	I	USB DAC Connection Check
114	P114	NC	-	O	O/L	O/L	O/L	NC
115	P113	ISEL_B	PU	I	I	I	I	INPUT JOG SIGNAL IN-B
116	P112/(RXD8)	RDS_DATA	PD	I	I	I	I	RDS DATA for Eur Version

Pin	Pin Name	Port Name	PD/PU	I/O	STANDBY MODE			NOTE
					STANDBY	Network STANDBY	232C STANDBY	
117	P111/	NC	-	O	O/L	O/L	O/L	NC
118	P110/(TXD8)	NC	-	O	O/L	O/L	O/L	NC
119	P03/D3	DC_PROTECT2	PU	I	I	I	I	Power Down Detect
120	P02/D2	USB_RES	PU	O	O/L	O/L	O/L	USB DAC Control (RESET)
121	P01/D1	PREVIOUS	-	O	O/L	O/L	O/L	Not Used
122	P00/D0	STOP	-	O	O/L	O/L	O/L	Not Used
123	P157	DAC_RES	PD	O	O/L	O/L	O/L	DAC Control (RESET)
124	P156	DSPICLK	PU	O	O/L	O/L	O/L	DSP Control (CLK)
125	P155/RXD6	DSPMISO	PU	I	O/L	O/L	O/L	DSP Control (DATA_I)
126	P154/TXD6	DSPMOSI	PU	O	O/L	O/L	O/L	DSP Control (DATA_O)
127	P153	LED_CONT4	PD	O	O/L	O/L	O/L	LED Control (DISPLAY)
128	P152/RXD7	LED_CONT5	PD	O	O/L	O/L	O/L	LED Control (M-DAX)
129	P151/(CLK7)	NC	-	O	O/L	O/L	O/L	NC
130	VSS	VSS	-	-	-	-	-	GND
131	P150/TXD7	NC	-	O	O/L	O/L	O/L	NC
132	VCC	VCC	-	-	-	-	-	+3V
133	P107/(AN7) /(KI3)	NC	-	O	O/L	O/L	O/L	NC
134	P106/AN6/ KI2	KEY3	PU	I	I	I	I	Key Input3
135	P105/AN5 /KI1	KEY2	PU	I	I	I	I	Key Input2
136	P104/AN4 /KI0	KEY1	PU	I	I	I	I	Key Input1
137	P103/AN3	NC	-	O	O/L	O/L	O/L	NC
138	P102/AN2	P.DET	-	I	I	I	I	Not Used
139	P101/(AN1)	MODEL_1	PU	I	I	I	I	Version Select
140	AVSS	AVSS	-	-	-	-	-	GND
141	P100/AN0	MODEL_2	PU	I	I	I	I	Model Select
142	VREF	VREF	-	-	-	-	-	+3V
143	AVCC	AVCC	-	-	-	-	-	+3V
144	(P97)/RXD4	UART_MISO	-	I	I	I	I	Receive Data for Display ucom at Updating

R5F64169DFD (DISPLAY : IC81) Terminal Function

Pin No	Port Name	Symbol	I/O	Pull-U/D	Note
1	P96/(TXD4)	NC	O	PD(OPEN)	NC
2	(P95)/CLK4	NC	O	-	NC
3	P94/($\overline{CTS4}$)	NC	O	-	NC
4	P93/($\overline{CTS3}$)	NC	O	-	NC
5	P92/TXD3	NC	O	-	NC
6	P91/RXD3	NC	O	-	NC
7	P90/(CLK3)	NC	O	-	NC
8	(P146)/$\overline{INT8}$	NC	O	-	NC
9	P145/$\overline{INT7}$	NC	O	-	NC
10	P144/$\overline{INT6}$	NC	O	-	NC
11	P143	NC	O	-	NC
12	VDC0	VDC0	-	-	Smoothing capacitor connection terminal
13	P141(INPUT ONLY)	NC	I	PD	NC
14	VDC1	VDC1	-	-	Smoothing capacitor connection terminal
15	NSD	NSD	-	PU	Emulator communication pin
16	CNVSS(INPUT ONLY)	CNVSS	I	PD	Single-chip / Micro-processor mode switching (Normal single-chip : L, Rewrite boot program start : H input set)
17	P87/(XCIN)	NC	O	-	NC
18	P86/(XCOUT)	NC	I	PD	NC
19	RESET	OLED_RESET	I	PU	Reset input(Reset ="L")
20	XOUT	X2	-	-	Clock output
21	VSS	VSS	-	-	GND
22	XIN	X1	-	-	Clock input
23	VCC	VCC1	-	-	+3V
24	P85/$\overline{NMI}$	NMI	I	PU	NC
25	P84/$\overline{INT2}$	NC	O	-	NC
26	P83/$\overline{INT1}$	YOBI	O	-	Not use
27	P82/$\overline{INT0}$	OLED_CS	O	-	Chip Select of Display Data for Display ucom
28	P81	NC	I	PD	NC
29	P80/RXD5	BOOT	I	PD	Boot signal
30	(P77)/CLK5	NC	O	-	NC
31	(P76)/TXD5	NC	O	-	NC
32	P75/RXD8	OLED_POWER	O	PD	OLED Power On/Off
33	P74/CLK8	NC	O	-	NC
34	P73/TXD8	NC	O	-	NC
35	P72/CLK2	OLED_CLK	O	-	Clock of Display Data for Display ucom
36	P71/RXD2/(MSCL)	OLED_TX	O	-	Display Data for Display ucom
37	P70/TXD2/(MSDA)	OLED_RX	O	-	Not use
38	P67/TXD1	TXD CO	O	PD	Data transfer to external terminal(AMX)/MITSUBISHI writer
39	VCC	VCC1	-	-	+3V
40	P66/RXD1	RXD CO	I	PD	Data received from the external terminal(AMX)/MITSUBISHI writer
41	VSS	VSS	-	-	GND
42	P65/CLK1/SCLK(L)	SCLK_CO	O	PD	Writing Mode Select
43	P64/BUSY	BUSY_CO	O	-	BUSY Output at updating
44	P63/TXD0	OLED_UART_RX	O	-	Transfer Data for Display ucom at Updating
45	P62/RXD0	OLED_UART_TX	I	-	Receive Data for Display ucom at Updating
46	P61/CLK0	NC	O	-	NC
47	P60/$\overline{CTS0}$	NC	O	-	NC
48	P137	D7	O	-	Data Bus for OLED
49	P136/ISCLK2	D6	O	-	Data Bus for OLED
50	P135/ISRXD2	D5	O	-	Data Bus for OLED
51	P134/ISTXD2	D4	O	-	Data Bus for OLED
52	P57/$\overline{RDY}$	NC	O	-	NC
53	P56/ALE	NC	O	-	NC
54	P55/$\overline{HOLD}$/$\overline{EPM}$	EPM	I	PU	Rewrite boot program start : L input set
55	P54/$\overline{HLDA}$	NC	O	-	NC
56	P133	D3	O	-	Data Bus for OLED
57	VSS	VSS	-	-	GND
58	P132	D2	O	-	Data Bus for OLED
59	VCC	VCC2	-	-	+3V
60	P131	D1	O	-	Data Bus for OLED
61	P130	D0	O	-	Data Bus for OLED
62	P53/BCLK	NC	O	-	NC
63	P52/$\overline{RD}$	NC	I	PD	NC
64	P51/($\overline{WR1}$)/BC1	NC	O	-	NC

Pin No	Port Name	Symbol	I/O	Pull-U/D	Note
65	P50/($\overline{WR}$0)/WR/CE	CE_M	I	PD	Rewrite boot program start : H input set
66	P127	RES#	O	-	Reset, Active "L" for OLED
67	P126	D/C#	O	-	Data/Command Control. "H": Data, "L": Command for OLED
68	P125	CS#	O	-	Chiselect for OLED
69	P47/$\overline{CS}$0/(A23)	R/W#,WR#	O	-	Write (This pin stays "L"(low) in Serial Interface Mode) for OLED
70	P46/($\overline{CS}$1)/A22	E,RD#	O	-	Read (This pin stays "L"(low) in Serial Interface Mode) for OLED
71	P45/($\overline{CS}$2)/A21	NC	O	-	NC
72	P44/($\overline{CS}$3)/A20	NC	O	-	NC
73	P43/A19	NC	O	-	NC
74	VCC	VCC	-	-	+3V
75	P42/A18	NC	O	-	NC
76	VSS	VSS	-	-	GND
77	P41/A17	NC	O	-	NC
78	P40/A16	NC	O	-	NC
79	P37/A15	NC	O	-	NC
80	P36/A14	NC	O	-	NC
81	P35/A13	NC	O	-	NC
82	P34/A12	NC	O	-	NC
83	P33/A11	NC	O	-	NC
84	P32/A10	NC	O	-	NC
85	P31/A9	NC	O	-	NC
86	P124	NC	O	-	NC
87	P123	NC	O	-	NC
88	P122/(RXD6)	NC	O	-	NC
89	P121/(CLK6)	NC	O	-	NC
90	P120/(TXD6)	NC	O	-	NC
91	VCC	VCC	-	-	+3V
92	P30/A8	NC	O	-	NC
93	VSS	VSS	-	-	GND
94	P27/A7	NC	O	-	NC
95	P26/A6	NC	O	-	NC
96	P25/A5	NC	O	-	NC
97	P24/A4	NC	O	-	NC
98	P23/A3	NC	O	-	NC
99	P22/A2	NC	O	-	NC
100	P21/A1	NC	O	-	NC
101	P20/A0	NC	O	-	NC
102	P17/D15	NC	O	-	NC
103	P16/D14	NC	O	-	NC
104	P15/D13	NC	O	-	NC
105	P14/D12	NC	O	-	NC
106	P13/D11	NC	O	-	NC
107	P12/D10	NC	O	-	NC
108	P11/D9	NC	O	-	NC
109	P10/D8	NC	O	-	NC
110	P07/D7	NC	O	-	NC
111	P06/D6	NC	O	-	NC
112	P05/D5	NC	O	-	NC
113	P04/D4	NC	O	-	NC
114	P114	NC	O	-	NC
115	P113	NC	O	-	NC
116	P112/(RXD8)	NC	O	-	NC
117	P111/	NC	O	-	NC
118	P110/(TXD8)	NC	O	-	NC
119	P03/D3	NC	O	-	NC
120	P02/D2	NC	O	-	NC
121	P01/D1	NC	O	-	NC
122	P00/D0	NC	O	-	NC
123	P157	NC	O	-	NC
124	P156	NC	O	-	NC
125	P155/RXD6	NC	O	-	NC
126	P154/TXD6	NC	O	-	NC
127	P153	NC	O	-	NC
128	P152/RXD7	NC	O	-	NC
129	P151/(CLK7)	NC	O	-	NC
130	VSS	VSS	-	-	GND
131	P150/TXD7	NC	O	-	NC

Pin No	Port Name	Symbol	I/O	Pull-U/D	Note
132	VCC	VCC	-	-	+3V
133	P107/(AN7)/($\overline{KI3}$)	NC	O	-	NC
134	P106/AN6/$\overline{KI2}$	NC	O	-	NC
135	P105/AN5/$\overline{KI1}$	NC	O	-	NC
136	P104/AN4/$\overline{KI0}$	NC	O	-	NC
137	P103/AN3	NC	O	-	NC
138	P102/AN2	NC	O	-	NC
139	P101/(AN1)	NC	O	-	NC
140	AVSS	AVSS	-	-	GND
141	P100/AN0	NC	I	PD	Not use
142	VREF	VREF	-	-	+3V
143	AVCC	AVCC	-	-	+3V
144	(P97)/$\overline{RXD4}$	NC	O	-	NC

AK4683 (MAIN : IC23)

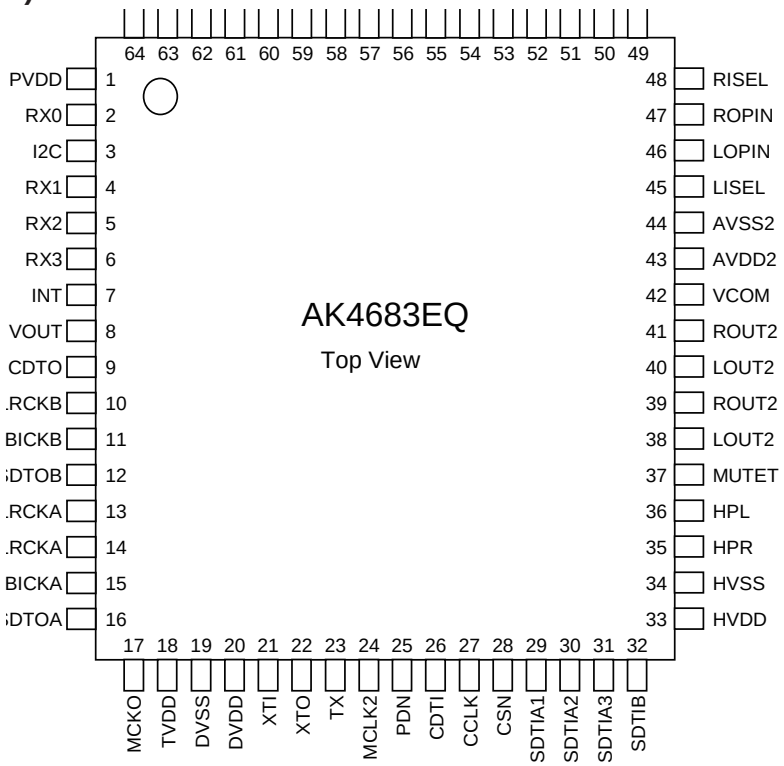

AK4683 Block Diagram

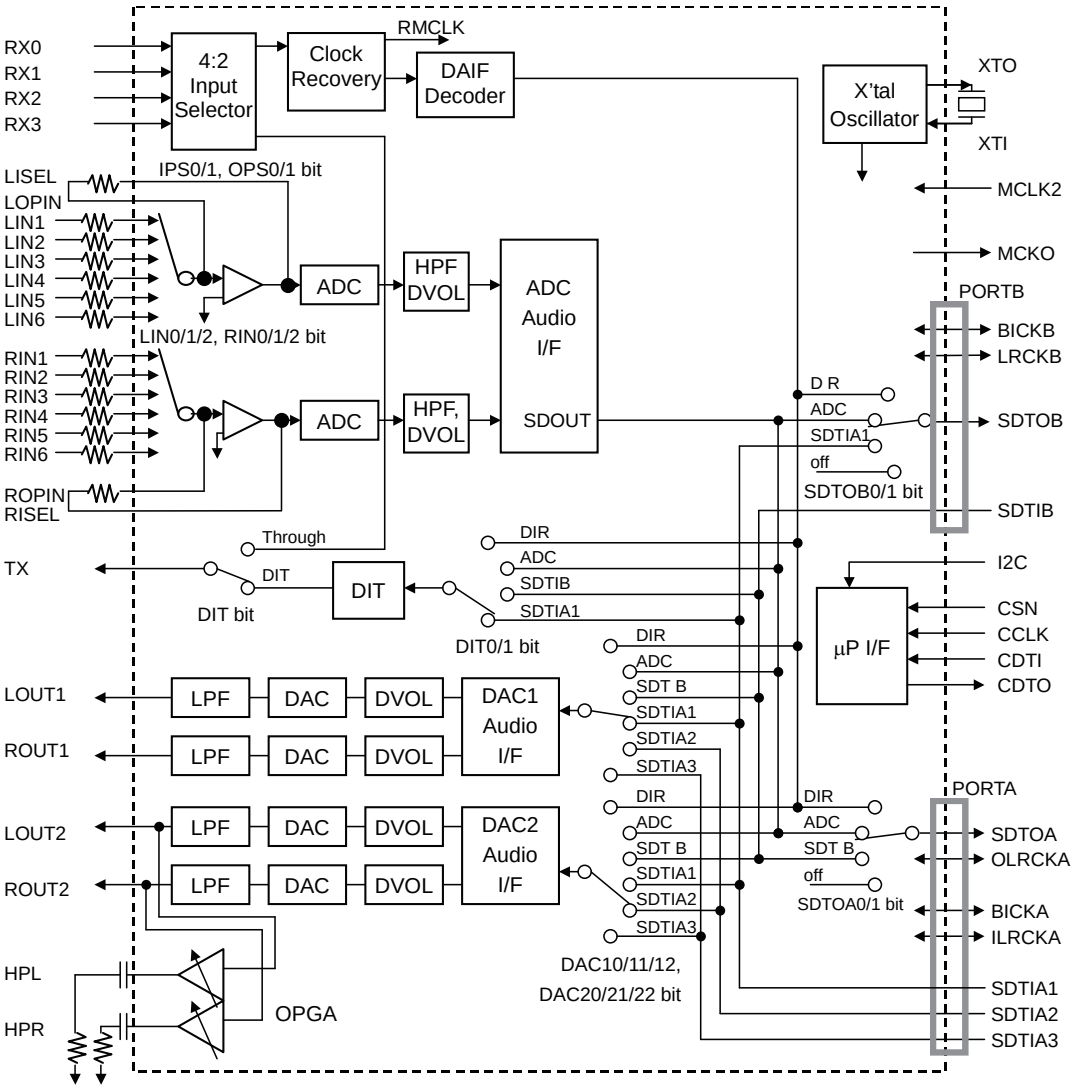

AK4683 Pin Discriptions

No.	Pin Name	I/O	Function
1	PVDD	-	PLL Power supply Pin, 4.5V~5.5V
2	RX0	I	Receiver Channel 0 Pin (Internal biased pin. Internally biased at PVDD/2)
3	I2C	I	Control Mode Select Pin. "L": 4-wire Serial, "H": I^2C Bus
4	RX1	I	Receiver Channel 1 Pin
5	RX2	I	Receiver Channel 2 Pin
6	RX3	I	Receiver Channel 3 Pin
7	INT	O	Interrupt Pin
8	VOUT	O	V-bit Output Pin for Receiver Input
	DZF	O	Zero Input Detect Pin When the input data of DAC follow total 8192 LRCK cycles with "0" input data, this pin goes to "H". And when RSTN1 bit is "0", PWDA bit is "0", this pin goes to "H".
	OVF	O	Analog Input Overflow Detect Pin This pin goes to "H" if the analog input of Lch or Rch overflows.
9	CDTO	O	Control Data Output Pin in Serial Mode and I2C pin = "L".
10	LRCKB	I/O	Channel Clock B Pin
11	BICKB	I/O	Audio Serial Data Clock B Pin
12	SDTOB	O	Audio Serial Data Output B Pin
13	OLRCKA	I/O	Output Channel Clock A Pin
14	ILRCKA	I/O	Input Channel Clock A Pin
15	BICKA	I/O	Audio Serial Data Clock A Pin
16	SDTOA	O	Audio Serial Data Output A Pin
17	MCKO	O	Master Clock Output Pin
18	TVDD	-	Output Buffer Power Supply Pin, 2.7V~5.5V
19	DVSS	-	Digital Ground Pin, 0V
20	DVDD	-	Digital Power Supply Pin, 4.5V~5.5V
21	XTI	I	X'tal Input Pin
22	XTO	O	X'tal Output Pin
23	TX	O	Transmit Channel Output pin When DIT bit = "0", RX0~3 Through. When DIT bit = "1", Internal DIT Output.
24	MCLK2	I	Master Clock Input Pin
25	PDN	I	Power-Down Mode & Reset Pin When "L", the AK4683 is powered-down, all registers are reset. And then all digital output pins go "L". The AK4683 must be reset once upon power-up.
26	CDTI	I	Control Data Input Pin in Serial Mode and I2C pin = "L".
	SDA	I/O	Control Data Pin in Serial Mode and I2C pin = "H".
27	CCLK	I	Control Data Clock Pin in Serial Mode and I2C pin = "L"
	SCL	I	Control Data Clock Pin in Serial Mode and I2C pin = "H"
28	CSN	I	Chip Select Pin in Serial Mode and I2C pin = "L".
	TEST	I	This pin should be connected to DVSS in Serial Mode and I2C pin = "H".
29	SDTIA1	I	Audio Serial Data Input A1 Pin
30	SDTIA2	I	Audio Serial Data Input A2 Pin
31	SDTIA3	I	Audio Serial Data Input A3 Pin
32	SDTIB	I	Audio Serial Data Input B Pin
33	HVDD	-	HP Power Supply Pin, 4.5V~5.5V
34	HVSS	-	HP Ground Pin, 0V
35	HPR	O	HP Rch Output Pin
36	HPL	O	HP Lch Output Pin
37	MUTET	-	HP Common Voltage Output Pin 1μF capacitor should be connected to HVSS externally.

No.	Pin Name	I/O	Function
38	LOUT2	O	DAC2 Lch Positive Analog Output Pin
39	ROUT2	O	DAC2 Rch Positive Analog Output Pin
40	LOUT1	O	DAC1 Lch Positive Analog Output Pin
41	ROUT1	O	DAC1 Rch Positive Analog Output Pin
42	VCOM	-	DAC/ADC Common Voltage Output Pin 2.2μF capacitor should be connected to AVSS2 externally.
43	AVDD2	-	DAC Power Supply Pin, 4.5V~5.5V
44	AVSS2	-	DAC Ground Pin, 0V
45	LISEL	O	Lch Feedback Resistor Output Pin
46	LOPIN	O	Lch Feedback Resistor Input Pin, 0.5xAVDD1
47	ROPIN	O	Rch Feedback Resistor Input Pin. 0.5xAVDD1
48	RISEL	O	Rch Feedback Resistor Output Pin
49	AVSS1	-	ADC Ground Pin, 0V
50	AVDD1	-	ADC Power Supply Pin, 4.5V~5.5V
51	LIN1	I	Lch Input 1 Pin
52	RIN1	I	Rch Input 1 Pin
53	LIN2	I	Lch Input 2 Pin
54	RIN2	I	Rch Input 2 Pin
55	LIN3	I	Lch Input 3 Pin
56	RIN3	I	Rch Input 3 Pin
57	LIN4	I	Lch Input 4 Pin
58	RIN4	I	Rch Input 4 Pin
59	LIN5	I	Lch Input 5 Pin
60	RIN5	I	Rch Input 5 Pin
61	LIN6	I	Lch Input 6 Pin
62	RIN6	I	Rch Input 6 Pin
63	PVSS	-	PLL Ground pin
64	R	-	External Resistor Pin 12kΩ +/-1% resistor should be connected to PVSS externally.

ICE3B0365J (MAIN : IC95)

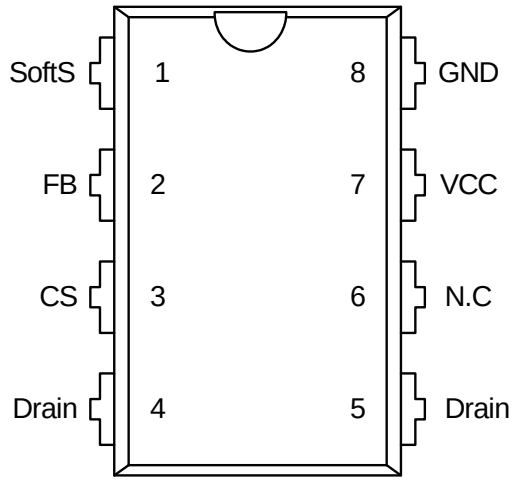

ICE3B0365J Block Diagram

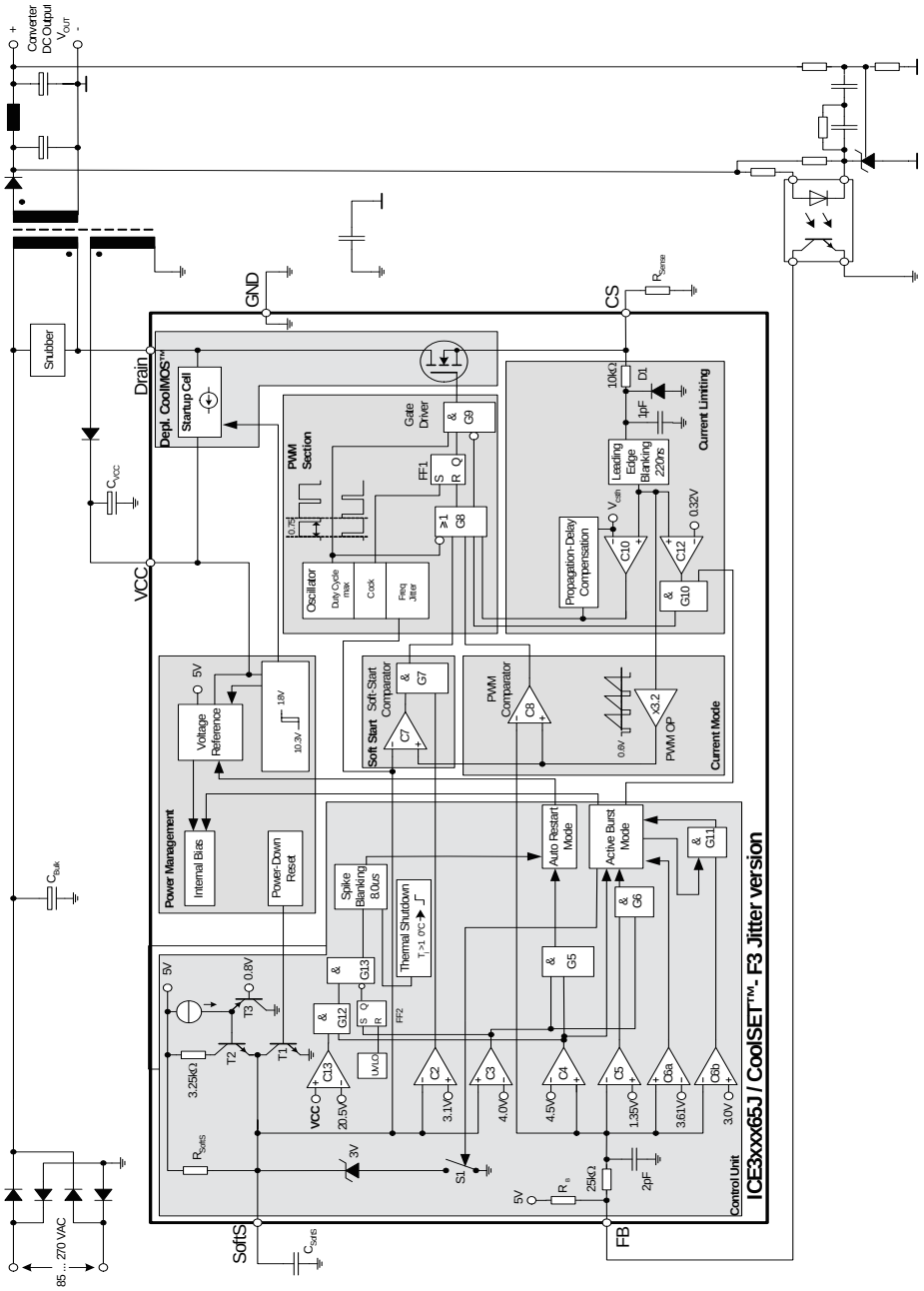

W9825G6EH-6J (ETHERNET : U3902)

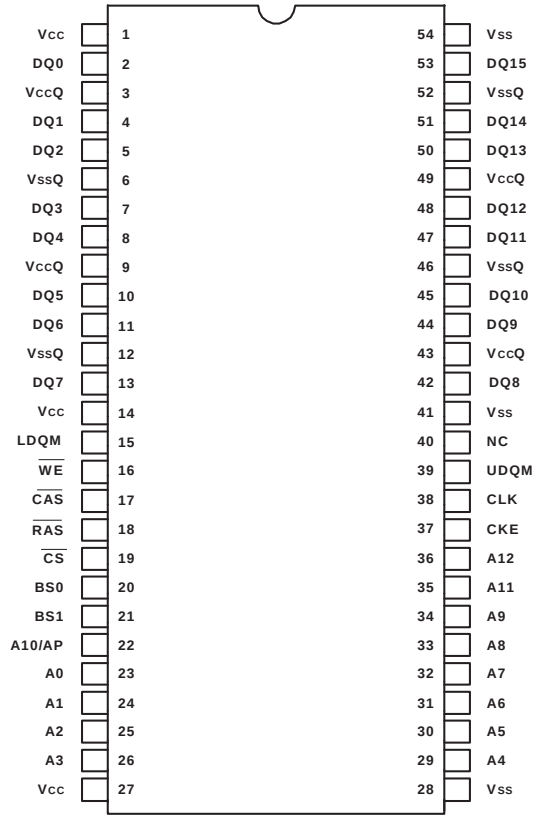

W9825G6EH-6J Block Diagram

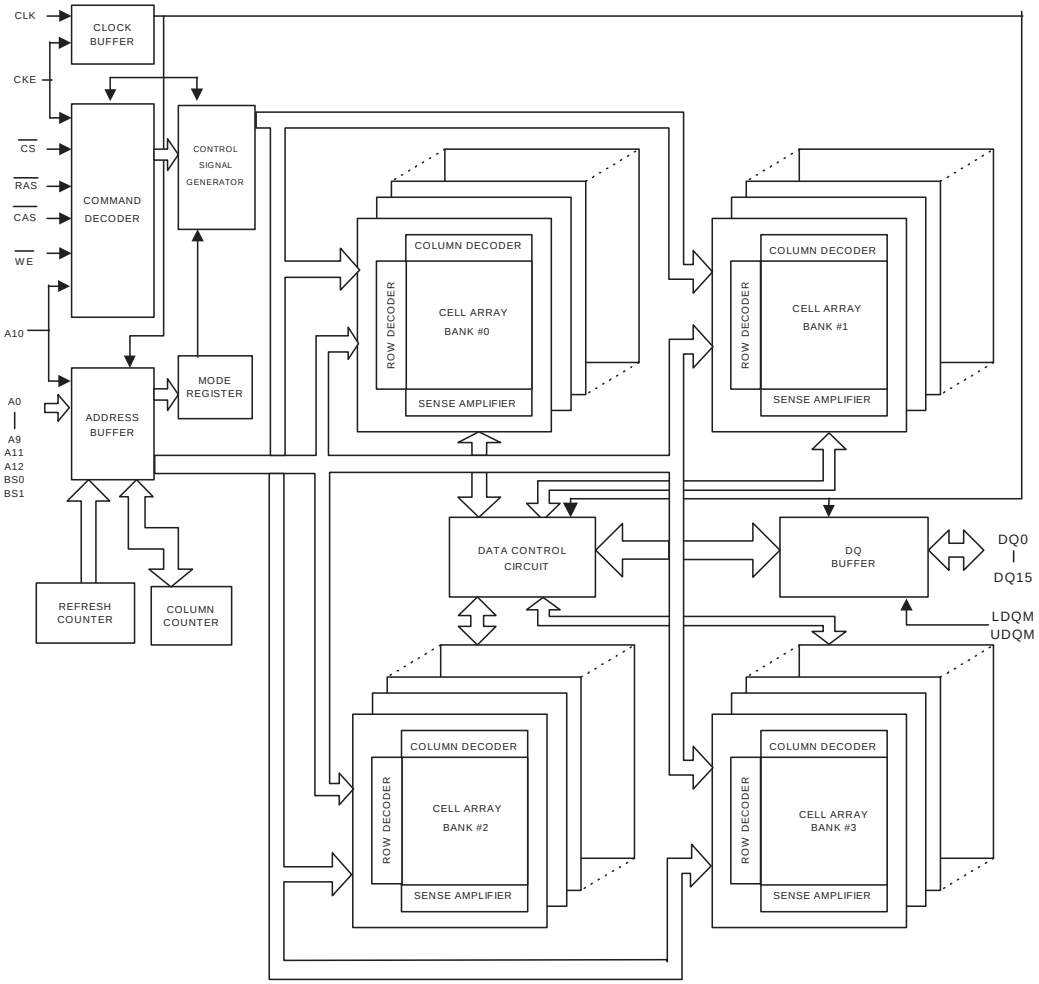

W9825G6EH-6J Pin Description

PIN NUMBER	PIN NAME	FUNCTION	DESCRIPTION
23–26, 22, 29–36	A0–A12	Address	Multiplexed pins for row and column address. Row address: A0–A12. Column address: A0–A8.
20, 21	BS0, BS1	Bank Select	Select bank to activate during row address latch time, or bank to read/write during address latch time.
2, 4, 5, 7, 8, 10, 11, 13, 42, 44, 45, 47, 48, 50, 51, 53	DQ0–DQ15	Data Input/Output	Multiplexed pins for data output and input.
19	$\overline{CS}$	Chip Select	Disable or enable the command decoder. When command decoder is disabled, new command is ignored and previous operation continues.
18	$\overline{RAS}$	Row Address Strobe	Command input. When sampled at the rising edge of the clock, $\overline{RAS}$, $\overline{CAS}$ and $\overline{WE}$ define the operation to be executed.
17	$\overline{CAS}$	Column Address Strobe	Referred to $\overline{RAS}$
16	$\overline{WE}$	Write Enable	Referred to $\overline{RAS}$
15, 39	LDQM, UDQM	Input/Output Mask	The output buffer is placed at Hi-Z(with latency of 2) when DQM is sampled high in read cycle. In write cycle, sampling DQM high will block the write operation with zero latency.
38	CLK	Clock Inputs	System clock used to sample inputs on the rising edge of clock.
37	CKE	Clock Enable	CKE controls the clock activation and deactivation. When CKE is low, Power Down mode, Suspend mode, or Self Refresh mode is entered.
1, 14, 27	V_{CC}	Power (+3.3V)	Power for input buffers and logic circuit inside DRAM.
28, 41, 54	V_{SS}	Ground	Ground for input buffers and logic circuit inside DRAM.
3, 9, 43, 49	V_{CCQ}	Power (+3.3V) for I/O Buffer	Separated power from V_{CC}, to improve DQ noise immunity.
6, 12, 46, 52	V_{SSQ}	Ground for I/O Buffer	Separated ground from V_{SS}, to improve DQ noise immunity.
40	NC	No Connection	No connection. (NC pin should be connected to GND or floating)

120 dB, 192 kHz Multi-Bit DAC with Volume Control

Features

- Advanced Multi-bit Delta-Sigma Architecture
  - 120 dB Dynamic Range
  - -107 dB THD+N
  - Low Clock Jitter Sensitivity
  - Differential Analog Outputs
- PCM input
  - 102 dB of Stopband Attenuation
  - Supports Sample Rates up to 192 kHz
  - Accepts up to 24 bit Audio Data
  - Supports All Industry Standard Audio Interface Formats
  - Selectable Digital Filter Response
  - Volume Control with 1/2 dB Step Size and Soft Ramp
  - Flexible Channel Routing and Mixing
  - Selectable De-Emphasis
- Supports Stand-Alone or I²C/SPI™ Configuration
  Embedded Level Translators
  - 1.8 V to 5 V Serial Audio Input
  - 1.8 V to 5 V Control Data Input
- Direct Stream Digital (DSD)
  - Dedicated DSD Input Pins
  - On-Chip 50 kHz Filter to Meet Scarlet Book SACD Recommendations
  - Matched PCM and DSD Analog Output Levels
  - Non-Decimating Volume Control with 1/2 dB Step Size and Soft Ramp
  - DSD Mute Detection
  - Supports Phase-Modulated Inputs
  - Optional Direct DSD Path to On-Chip Switched Capacitor Filter
- Control Output for External Muting
  - Independent Left and Right Mute Controls
  - Supports Auto Detection of Mute Output Polarity
- Typical Applications
  - DVD Players
  - SACD Players
  - A/V Receivers
  - Professional Audio Products

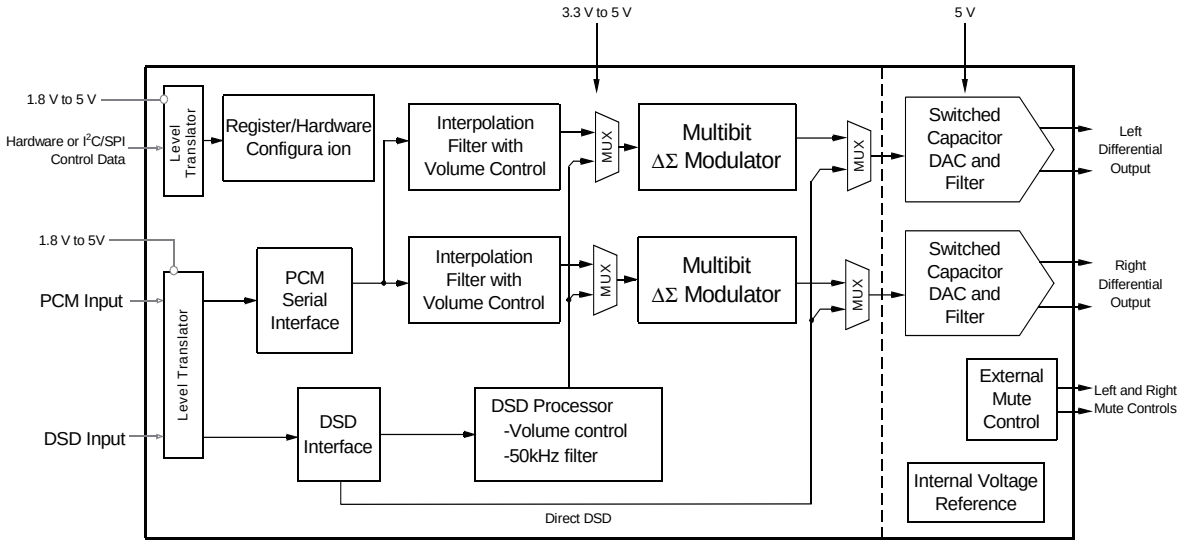

CS4398 (AUDIO : IC73)

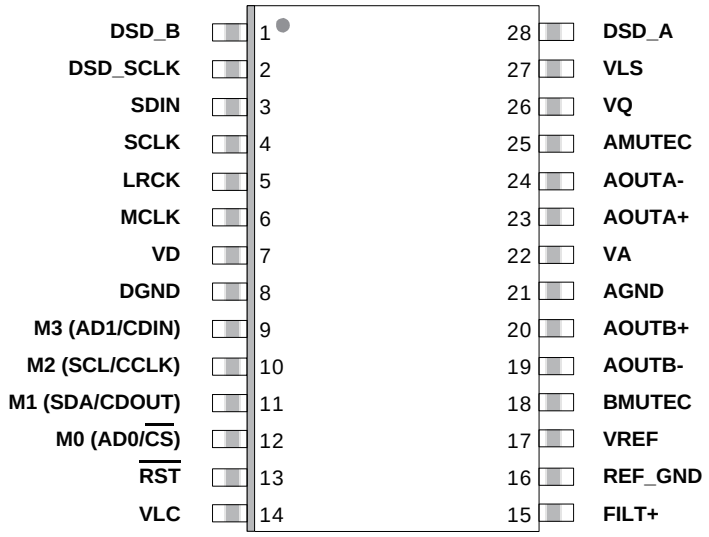

CS4398 Terminal Functions

Pin Name	Pin #	Pin Description
DSD_A DSD_B	28 1	**Direct Stream Digital Input** (*Input*) - Input for Direct Stream Digital serial audio data.
DSD_SCLK	2	**DSD Serial Clock** (*Input*) - Serial clock for the Direct Stream Digital audio interface.
SDIN	3	**Serial Audio Data Input** (*Input*) - Input for two's complement serial audio data.
SCLK	4	**Serial Clock** (*Input*) - Serial clock for the serial audio interface.
LRCK	5	**Left Right Clock** (*Input*) - Determines which channel, Left or Right, is currently active on the serial audio data line.
MCLK	6	**Master Clock** (*Input*) - Clock source for the delta-sigma modulator and digital filters.
VD	7	**Digital Power** (*Input*) **-** Positive power for the digital section.
DGND	8	**Digital Ground** (*Input*) - Ground reference for the digital section.
RST	13	**Reset** (*Input*) - The device enters system reset when enabled.
VLC	14	**Control Port Power** (*Input*) **-** Positive power for Control Port I/O.
FILT+	15	**Positive Voltage Reference** (*Output*) **-** Positive reference voltage for the internal sampling circuits.
REF_GND	16	**Reference Ground** (*Input*) - Ground reference for the internal sampling circuits.
VREF	17	**Voltage Reference** (*Input*) - Positive voltage reference for the internal sampling circuits.
BMUTEC AMUTEC	18 25	**Mute Control** (*Output*) - The Mute Control pin is active during power-up initialization, muting, power-down or if the master clock to left/right clock frequency ratio is incorrect. During reset, these outputs are set to a high impedance.
AOUTB+ AOUTB-	20 19	**Differential Right Channel Analog Output** (*Output*) - The full-scale differential analog output level is specified in the Analog Characteristics specification table.
AGND	21	**Analog Ground** (*Input*) - Ground reference for the analog section.
VA	22	**Analog Power** (*Input*) **-** Positive power for the analog section.
AOUTA+ AOUTA-	23 24	**Differential Left Channel Analog Output** (*Output*) - The full-scale differential analog output level is specified in the Analog Characteristics specification table.
VQ	26	**Quiescent Voltage** (*Output*) - Filter connection for internal quiescent voltage.
VLS	27	**Serial Audio Interface Power** (*Input*) **-** Positive power for serial audio interface I/O.
Stand-Alone Mode Definitions		
M3 M2 M1 M0	9 10 11 12	**Mode Selection** (*Input*) - Determines the operational mode of the device.
Control Port Mode Definitions		
AD1/CDIN	9	**Address Bit 1 (I²C) / Control Data Input (SPI)** (*Input*) - AD1 is a chip address pin in I²C mode; CDIN is the input data line for the Control Port interface in SPI mode.
SCL/CCLK	10	**Serial Control Port Clock** (*Input*) - Serial clock for the serial Control Port.
SDA/CDOUT	11	**Serial Control Data (I²C) / Control Data Output (SPI)** (*Input/Output*) - SDA is a data I/O line in I²C mode. CDOUT is the output data line for the Control Port interface in SPI mode.
AD0/$\overline{CS}$	12	**Address Bit 0 (I²C) / Control Port Chip Select (SPI)** (*Input*) - AD0 is a chip address pin in I²C mode; $\overline{CS}$ is the chip select signal for SPI format.

TE7022L (MAIN :IC910)

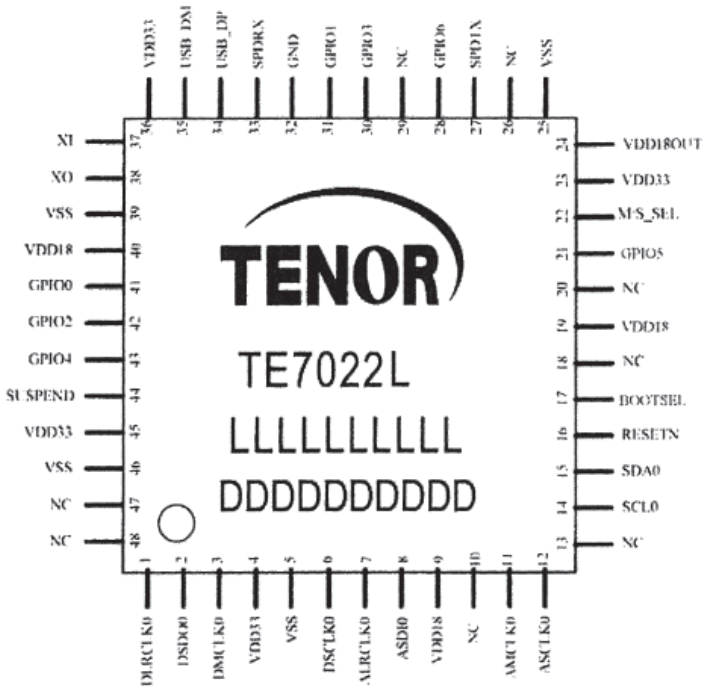

TE7022L Pin Descriptions

Pin	Pin Name	I/O	Pin Descriptions
1	DLRCLK0	I/O	I2S-Out L/R Clock: Output in master mode, Input in slave mode
2	DSDO0	O	I2S-Out Data
3	DMCLK0	O	I2S-Out Mater Clock
4	VDD33	I	Power 3.3V supply
5	VSS	-	Ground
6	DSCLK0	I/O	I2S-Out Bit Clock, Output in master mode, Input in slave mode
7	ALRCLK0	I/O	I2S-In L/R Clock, Output in master mode, Input in slave mode
8	ASDI0	I	I2S-In Data
9	VDD18	I	Core Power 1.8V supply
10	TEST	I/O	For FT test only
11	AMCLK0	O	I2S-In Master Clock
12	ASCLK0	I/O	I2S Input Bit Clock, Output in master mode, Input in slave mode
13	NC	-	NC
14	SCL0	I/O	2-Wire Clock
15	SDA0	I/O	2-Wire Data
16	RESETN	I	Reset pin. Active "Low" , Internal Pull-up
17	BOOTSEL	I	Strapping Pin for Boot from External EEPROM or internal ROM Pull-down is boot form internal ROM. (Please refer to "Chapter 5.5 External EEPROM Support")
18	NC	-	NC
19	VDD18	I	Core Power 1.8V supply

TE7022L Pin Descriptions

20	NC	-	NC
21	GPIO5	I/O	GPIO5
22	M/S_SEL	I	Power on strapping for I2S(In/Out) Master/Slave select pin. Pull-up is Slave mode.
23	VDD33	I	Power 3.3V supply
24	VDD18OUT	O	1.8V output
25	VSS	-	GND
26	TEST	I/O	For FT test only
27	SPDTX	O	S/PDIF TX
28	GPIO6	I/O	GPIO6
29	NC	-	NC
30	GPIO3	I/O	GPIO3
31	GPIO1	I/O	GPIO1
32	VSS	-	GND
33	SPDRX	I	S/PDIF RX
34	USB_DP	I/O	USB D+
35	USB_DM	I/O	USB D-
36	VDD33	I	Power 3.3V
37	XI	I	X'tal Clock
38	XO	O	X'tal Clock
39	VSS	-	GND
40	VDD18	I	Core Power 1.8V supply
41	GPIO0	I/O	GPIO0
42	GPIO2	I/O	GPIO2
43	GPIO4	I/O	1. For internal ROM is report for HID "Scan Next Track" function 2. GPIO4 becomes an input only pin if external ROM descriptor is used. It will reflect the board power status. a. If the system is currently self-powered, it should feed a 1 to GPIO4. b. If the system is currently bus-powered, it should feed a 0 to GPIO4. **Note that the "Scan Next Track" in HID report in this scenario should be removed.**
44	SUSPEND	O	When USB in Suspend mode: '1', USB in normal mode: '0'.
45	VDD33	I	Power 3.3V
46	VSS	-	GND
47	NC	-	NC
48	NC	-	NC

2. DISPLAY

MXS4003A (DISPLAY : CN84)

端子番号 Pin No.	端子名 Pin Name	入出力 IO	機能 Functions
1	VSS	P	グランド GND
2	NC	-	
3	VCC	P	ドライバー系陽極電源 Power supply for Anode Driver
4	VCOMH	O	ドライバー系陰極電源 Power supply for Cathode Driver
5	VLSS	P	アナロググランド Analog system ground
6	D7	I	データバス Data Bus
7	D6	I	データバス Data Bus
8	D5	I	データバス Data Bus
9	D4	I	データバス Data Bus
10	D3	I	データバス Data Bus
11	D2	I	データバス Data Bus
12	D1 (SDIN)	I	データバス、またはシリアルデータ入力 Data Bus or Serial Date Input
13	D0 (SCLK)	I	データバス、またはシリアルクロック入力 Data Bus or Serial Clock Input
14	E, RD#	I	読み出し (シリアルインターフェース時、内部で "L" 固定になる) Read (This pin stays "L"(low) in Serial Interface Mode)
15	R/W#, WR#	I	書き込み (シリアルインターフェース時、内部で "L" 固定になる) Write (This pin stays "L"(low) in Serial Interface Mode)
16	BS0	I	インターフェース選択子 Select MCU bus interface setting ・BS0=0, BS1=0 : 4 line SPI ・BS0=0, BS1=1 : 8bit 8080 Parallel ・BS0=1, BS1=0 : 3 line SPI ・BS0=1, BS1=1 : 8bit 6800 Parallel
17	BS1	I	
18	D/C#	I	データ/コマンド切替制御 "H":データ, "L":コマンド Data/Command Control. "H":Data, "L":Command
19	CS#	I	チップセレクト "L" でI/F通信可能 Chip Select, Active "L"
20	RES#	I	リセット "L"でリセット Reset, Active "L"
21	Reserved	O	NCとしてください Please No Connect.
22	IREF	O	陽極出力基準電流設定端子 Reference current setting
23	NC	-	
24	VDDIO	P	インターフェイス系電源 Power supply for Interface logic level
25	VDD	O	内部ロジック系電源 Power supply for Core logic operation
26	VCI	P	外部ロジック系電源 Low voltage power supply
27	VSL	P	陽極基準電位 Segment Reference voltage
28	VLSS	P	アナロググランド Analog system ground
29	NC	-	
30	VCC	P	ドライバー系陽極電源 Power supply for Anode Driver

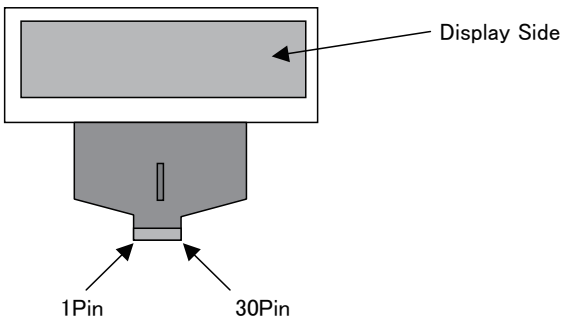

PARTS LIST OF P.C.B. UNIT

* Parts for which "nsp" is indicated on this table cannot be supplied.
* The parts listed below are for maintenance only, might differ from the parts used in the unit in appearances or dimensions.

Note: The symbols in the column "Remarks" indicate the following destinations.

U : North America model N : Europe model K : China model
B : Black model SG : Silver gold model

AUDIO PCB ASS'Y

	Ref. No.	Part No.	Part Name	Remarks		Q'ty	New
SEMICONDUCTORS GROUP							
	IC35	00D2631205900	REGULATOR PQ012FZ01ZP	N	HVIPQ012FZ01ZP		
	IC73	90M-HC109330R	AUDIO DAC (TSSOP-28 PACKAGE) CS4398-CZ		HVICS4398CZ		
	IC75	00D2631100034	I.C , VOL-REGULATOR(15V TO-220IS-4) KIA7815API-U/PF		CVIKIA7815AP		
	IC76	00MHC3890599F	REGULATOR, +5V KIA7805API-U/PF		HVIKIA7805API		
	IC77	90M-HC900150R	I.C , REGULATOR(SOT-223) KIA1117S/F33		CVIKIA1117S33		
	IC81	00MHC10102090	I.C , OP AMP (JRC) NJM2068MD-TE1		HVINJM2068MDTE1		
	Q601,602	00MHF203691B0	FET (N-CH) AUDIO (TO-92 PKG) 2SK369BL		HVT2SK369BLT		
	Q603	00MHT800931A0	T.R KTC3200GR		HVTKTC3200GRT		
	Q604,605	00MHT600121A0	T.R KTA1268GR		HVTKTA1268GRT		
	Q606,607	00MHT800931A0	T.R KTC3200GR		HVTKTC3200GRT		
	Q608,609	00MHT600121A0	T.R KTA1268GR		HVTKTA1268GRT		
	Q610-612	00MHT800931A0	T.R KTC3200GR		HVTKTC3200GRT		
	Q613	00MHT600121A0	T.R KTA1268GR		HVTKTA1268GRT		
	Q616,617	00MHT805501B0	T.R , MUTE KTC2874B		HVTKTC2874BT		
	Q701,702	00MHF203691B0	FET (N-CH) AUDIO (TO-92 PKG) 2SK369BL		HVT2SK369BLT		
	Q703	00MHT800931A0	T.R KTC3200GR		HVTKTC3200GRT		
	Q704,705	00MHT600121A0	T.R KTA1268GR		HVTKTA1268GRT		
	Q706,707	00MHT800931A0	T.R KTC3200GR		HVTKTC3200GRT		
	Q708,709	00MHT600121A0	T.R KTA1268GR		HVTKTA1268GRT		
	Q710-712	00MHT800931A0	T.R KTC3200GR		HVTKTC3200GRT		
	Q713	00MHT600121A0	T.R KTA1268GR		HVTKTA1268GRT		
	Q714	00MBA20001000	T.R , TO-92M KRC102M		HVTKRC102MT		
	Q715	00MBA10001000	T.R , TO-92M KRA102M		HVTKRA102MT		
	Q716,717	00MHT805501B0	T.R , MUTE KTC2874B		HVTKTC2874BT		
	Q718	00MBA20001000	T.R , TO-92M KRC102M		HVTKRC102MT		
	Q744,745	00MBA20001000	T.R , TO-92M KRC102M		HVTKRC102MT		
	Q801,802	00MHT800951B0	T.R KTC3203Y		HVTKTC3203YT		
	Q803,804	00MHT600141B0	T.R KTA1271Y		HVTKTA1271YT		
	Q807-810	00MHT805501B0	T.R , MUTE KTC2874B		HVTKTC2874BT		
	Q902	2120500010090	T.R 2SB1020AJA		CVT2SB1020AJA		
	Q903	2140500010050	T.R 2SD1415AJA		CVT2SD1415AJA		
	D301	00MHD20015210	DIODE , SWITCHING ISS133(T/B)	N	CVD1SS133MT		
	D303	00MNN05010610	RES , CHIP(1 OHM , 5% , 1608)	N	CRJ10DJ1R0T		
	D304	00MHD20015210	DIODE , SWITCHING ISS133(T/B)	N	CVD1SS133MT		
	D601-608	00MHD20015210	DIODE , SWITCHING ISS133(T/B)		CVD1SS133MT		
	D701-708	00MHD20015210	DIODE , SWITCHING ISS133(T/B)		CVD1SS133MT		
	D721,722	00MHD20015210	DIODE , SWITCHING ISS133(T/B)		CVD1SS133MT		
	D801-804	00MHD20015210	DIODE , SWITCHING ISS133(T/B)		CVD1SS133MT		
	D916-919	00MHD20055100	DIODE , SCHOTTKY (100V/1A)		CVD11EQS10GT		
	D924	90M-HD302450R	DIODE , ZENER 13V ZJ13B 1/2W		CVDZJ13BT		
	D925	00MHD20015210	DIODE , SWITCHING ISS133(T/B)		CVD1SS133MT		
	D926	90M-HD302450R	DIODE , ZENER 13V ZJ13B 1/2W		CVDZJ13BT		

	Ref. No.	Part No.	Part Name	Remarks		Q'ty	New
	D927	00MHD20015210	DIODE , SWITCHING ISS133(T/B)		CVD1SS133MT		
RESISTORS GROUP							
	VR81	90M-RB000040R	RES , VARIABLE		CVV2J02B103Z		
CAPACITORS GROUP							
	C327,328	nsp	CAP , CERAMIC(100PF/50V)	N	CCBS1H101KBT		
	C329	nsp	CAP , CERAMIC 0.1UF 50V Z	N	CCBS1H104ZFT		
	C330	nsp	CAP , ELECT 100UF 16V	N	CCEA1CKS101T		
	C331	nsp	CAP , CERAMIC 0.1UF 50V Z	N	CCBS1H104ZFT		
	C332	nsp	CAP , ELECT 100UF 16V	N	CCEA1CKS101T		
	C333	nsp	CAP , CERAMIC 0.1UF 50V Z	N	CCBS1H104ZFT		
	C334	nsp	CAP , ELECT 100UF 10V	N	CCEA1AKS101T		
	C335-337	nsp	CAP , CERAMIC 0.1UF 50V Z	N	CCBS1H104ZFT		
	C338	nsp	CAP , ELECT 47UF 16V	N	CCEA1CKS470T		
	C339	nsp	CAP , CERAMIC 0.1UF 50V Z	N	CCBS1H104ZFT		
	C340	nsp	CAP , ELECT 47UF 16V	N	CCEA1CKS470T		
	C341	nsp	CAP , CERAMIC 0.1UF 50V Z	N	CCBS1H104ZFT		
	C342	nsp	CAP , ELECT 330UF 10V	N	CCEA1AH331T		
	C343	nsp	CAP , CERAMIC 0.1UF 50V Z	N	CCBS1H104ZFT		
	C344	nsp	CAP , CERAMIC 0.01UF 50V Z	N	CCBS1H103ZFT		
	C345	nsp	CAP , CERAMIC(1000PF/50V)	N	CCBS1H102KBT		
	C400	nsp	CAP , CERAMIC 0.1UF 50V Z	N	CCBS1H104ZFT		
	C401	nsp	CAP , CERAMIC 0.01UF 50V Z	N	CCBS1H103ZFT		
	C434	nsp	CAP,POLYPROPYLENE(FAS(133)-200V-121K)		CCMP2B121KS17T		
	C492	nsp	CAP , CERAMIC 0.1UF 50V Z	N	CCBS1H104ZFT		
	C493	nsp	CAP , CERAMIC 0.01UF 50V Z	N	CCBS1H103ZFT		
	C603	nsp	CAP,POLYPROPYLENE(FAS(133)-200V-121K)		CCMP2B121KS17T		
	C605	nsp	CAP,POLYPROPYLENE(FAS(133)-200V-121K)		CCMP2B121KS17T		
	C606	nsp	CAP,POLYPROPYLENE(FAS(133)-200V-101K)		CCMP2B101KS17T		
	C608	nsp	CAP,POLYPROPYLENE(FAS(133)-200V-101K)		CCMP2B101KS17T		
	C609	00MOA227025R0	CAP , ELECT(220UF/25V, 10X20, ELNA/ROA)		CCEA1EROA221T		
	C610,611	00MOA227016Z0	CAP , ELECT(ELNA/ROS, 16V/220UF)		CCEA1CR221T		
	C701	nsp	CAP,POLYPROPYLENE(FNS(135)-100VDC-182J)		CCMP2A182JS13T		
	C703	nsp	CAP,POLYPROPYLENE(FAS(133)-200V-121K)		CCMP2B121KS17T		
	C705	nsp	CAP,POLYPROPYLENE(FAS(133)-200V-121K)		CCMP2B121KS17T		
	C706	nsp	CAP,POLYPROPYLENE(FAS(133)-200V-101K)		CCMP2B101KS17T		
	C708	nsp	CAP,POLYPROPYLENE(FAS(133)-200V-101K)		CCMP2B101KS17T		
	C709	00MOA227025R0	CAP , ELECT(220UF/25V, 10X20, ELNA/ROA)		CCEA1EROA221T		
	C710,711	00MOA227016Z0	CAP , ELECT(ELNA/ROS, 16V/220UF)		CCEA1CR221T		
	C720	nsp	CAP , ELECT 100UF 50V		CCEA1HH101T		
	C721,722	nsp	CAP , CERAMIC 0.1UF 50V Z		CCBS1H104ZFT		
	C723	nsp	CAP , ELECT 100UF 25V		CCEA1EH101T		
	C730	nsp	CAP,POLYPROPYLENE(FNS(135)-100VDC-182J)		CCMP2A182JS13T		
	C744	nsp	CAP , ELECT 220UF 25V		CCEA1EH221T		
	C751	nsp	CAP , ELECT 100UF 25V		CCEA1EH101T		
	C752	nsp	CAP , CERAMIC 0.1UF 50V Z		CCBS1H104ZFT		
	C753	nsp	CAP , ELECT 100UF 25V		CCEA1EH101T		
	C754	nsp	CAP , CERAMIC 0.1UF 50V Z		CCBS1H104ZFT		
	C755	00MOA227025R0	CAP , ELECT(220UF/25V, 10X20, ELNA/ROA)		CCEA1EROA221T		

	Ref. No.	Part No.	Part Name	Remarks		Q'ty	New
	C756	nsp	CAP , ELECT 3.3UF 50V		CCEA1HH3R3T		
	C757	00MOA227025R0	CAP , ELECT(220UF/25V, 10X20, ELNA/ROA)		CCEA1EROA221T		
	C758-760	nsp	CAP , CERAMIC 0.1UF 50V Z		CCBS1H104ZFT		
	C761,762	90M-OA000330R	CAP , ELECT 33UF 50V		CCEA1HH330T		
	C763	nsp	CAP , ELECT 100UF 16V		CCEA1CH101T		
	C764,765	nsp	CAP , CERAMIC 0.1UF 50V Z		CCBS1H104ZFT		
	C790	nsp	CAP , CERAMIC 0.1UF 50V Z		CCBS1H104ZFT		
	C791	nsp	CAP , CERAMIC(1000PF/50V)		CCBS1H102KBT		
	C792	nsp	CAP , CERAMIC 0.01UF 50V Z		CCBS1H103ZFT		
	C801,802	nsp	CAP , ELECT 220UF 16V		CCEA1CH221T		
	C803,804	nsp	CAP , ELECT 100UF 25V		CCEA1EH101T		
	C805,806	nsp	CAP , CERAMIC(1000PF/50V)		CCBS1H102KBT		
	C807-810	nsp	CAP , ELECT 100UF 25V		CCEA1EH101T		
	C820	nsp	CAP , CERAMIC 0.1UF 50V Z		CCBS1H104ZFT		
	C821	nsp	CAP , CERAMIC(1000PF/50V)		CCBS1H102KBT		
	C822	nsp	CAP , CERAMIC 0.01UF 50V Z		CCBS1H103ZFT		
	C823	nsp	CAP , CERAMIC 0.1UF 50V Z		CCBS1H104ZFT		
	C824	nsp	CAP , CERAMIC(1000PF/50V)		CCBS1H102KBT		
	C825	nsp	CAP , CERAMIC 0.01UF 50V Z		CCBS1H103ZFT		
	C826	nsp	CAP , CERAMIC 0.1UF 50V Z		CCBS1H104ZFT		
	C827	nsp	CAP , CERAMIC(1000PF/50V)		CCBS1H102KBT		
	C828	nsp	CAP , CERAMIC 0.01UF 50V Z		CCBS1H103ZFT		
	C840	nsp	CAP , CERAMIC 0.1UF 50V Z		CCBS1H104ZFT		
	C841	nsp	CAP , CERAMIC(1000PF/50V)		CCBS1H102KBT		
	C843	nsp	CAP , CERAMIC 0.01UF 50V Z		CCBS1H103ZFT		
	C900	nsp	CAP , CERAMIC 0.01UF 50V Z		CCBS1H103ZFT		
	C910	nsp	CAP , CERAMIC 0.1UF 50V Z		CCBS1H104ZFT		
	C917	00MOB10803570	CAP , ELECT(ELNA/LAO, 35V/1000UF)		CCEA1VLAO102E		
	C918	nsp	CAP , ELECT 47UF 25V		CCEA1EH470T		
	C919	00MOA227016R1	CAP , ELECT (220uF/16V, ROA, ELNA)		CCEA1CROA221T		
	C920	00MOB10803570	CAP , ELECT(ELNA/LAO, 35V/1000UF)		CCEA1VLAO102E		
	C921	nsp	CAP , ELECT 47UF 25V		CCEA1EH470T		
	C922	00MOA227016R1	CAP , ELECT (220uF/16V, ROA, ELNA)		CCEA1CROA221T		
	C930	nsp	CAP , CERAMIC 0.1UF 50V Z		CCBS1H104ZFT		
	C931	nsp	CAP , CERAMIC(1000PF/50V)		CCBS1H102KBT		
	C932	nsp	CAP , CERAMIC 0.01UF 50V Z		CCBS1H103ZFT		
	C940	nsp	CAP , CERAMIC 0.1UF 50V Z		CCBS1H104ZFT		
	C941	nsp	CAP , CERAMIC(1000PF/50V)		CCBS1H102KBT		
	C950	nsp	CAP , CERAMIC(1000PF/50V)		CCBS1H102KBT		
	C951	nsp	CAP , CERAMIC 0.01UF 50V Z		CCBS1H103ZFT		
	C952	nsp	CAP , CERAMIC 0.1UF 50V Z		CCBS1H104ZFT		
	C953	nsp	CAP , CERAMIC(1000PF/50V)		CCBS1H102KBT		
	C954	nsp	CAP , CERAMIC 0.01UF 50V Z		CCBS1H103ZFT		
OTHER PATRS GROUP							
	AS7	nsp	FERRITE , CORE(21.2X6.4X12.7)		CLZ9Z028Z		
	AS8	nsp	WIRE ASS'Y(5P, 2MM, 100MM)		CWB1C00510047		
	AS9	nsp	HEAT SINK		CMY2A223		
	AS9	nsp	HEAT SINK		CMY2A223		
	AS10	nsp	SCREW		CTB3+8JR		
	AS11	00MHT21020100	T.R , DARLINGTON 2SB1020A(F)		CVT2SB1020A		

	Ref. No.	Part No.	Part Name	Remarks		Q'ty	New
	AS15	00MHT41415100	T.R , DARLINGTON 2SB1020A(F)		CVT2SD1415A		
	BN42	nsp	WIRE ASS'Y(15P, 2MM, 100MM)		CWB1C01510047		
	BN43	nsp	WIRE ASS'Y(5P, 2MM, 50MM)		CWB1C00505047		
	BN81	nsp	WIRE ASS'Y(9P, 2MM, 100MM, SHIELD)		CWB1C00910047001		
	BN431	nsp	WIRE ASS'Y (5P, 100mm, 2mm, WITH RING CORE)		CWB1C00510047001		
	CN10	nsp	WAFER , CARD CABLE	N	CJP11GB113ZY		
	CN32	nsp	2.54mm 30PIN WAFER	N	CJP30GA221ZB		
	CN81	nsp	LOCKING TYPE , STRAIGHT WAFER , 2MM		CJP09GI236ZW		
	CN94	nsp	LOCKING TYPE , STRAIGHT WAFER, 2.5MM		CJP03GI237ZW		
	ET31,32	nsp	BRACKET , PCB	N	CMD1A569		
	ET71	nsp	BRACKET , PCB		CMD1A569		
	ET72-75	nsp	PALTE , EARTH		HJT1A025		
	ET81	nsp	PLATE , EARTH		CMC1A348		
	H10	nsp	WIRE ASS'Y		CWE7202100AR		
	JK61	943643002370S	JACK , 1P BOARD (WHITE, GD PLATE)		CJJ4M064Z		
	JK71	943643002380S	JACK , 1P BOARD (RED, GD PLATE)		CJJ4M065Z		
	L305-307	nsp	BEAD , CORE	N	KLZ9H001Z		
	L702	nsp	WIRE , COPPER		C3A206		
	L751	nsp	BEAD , CORE		KLZ9H001Z		
	PH81	90M-YT004500R	JACK , HEADPHONE(SILVER PLATE)		CJJ2E026Z		

MAIN PCB ASS'Y

	Ref. No.	Part No.	Part Name	Remarks		Q'ty	New
SEMICONDUCTORS GROUP							
	IC21	90M-HC108430R	I.C TC74HC7007AFEL		HVITC74HCT7007F		
	IC22	00D2622977933	I.C , REGULATOR CHIP (+5V) BA50BC0FP		BVIBA50BC0FP		
	IC23	00D2623762008	I.C , AUDIO CODEC(64PIN_LQFP, 0.5MM) AK4683EQ		CVIAK4683EQ		
	IC25	00MHC10102090	I.C , OP AMP (JRC) NJM2068MD-TE1		HVINJM2068MDTE1		
	IC26	943231011220S	I.C , REGULATOR (9V, DPAK-5) IKIA78R09F	N	CVIKIA78R09F		
	IC31	8R2431005900S	I.C , U-COM ANAM1524NT		CVIANAM1524NT		*
	IC32	90M-HW100690R	SENSOR , REMOCON(36KHz) RPM6936		CRVRPM6936		
	IC34	943234012160S	I.C , RS-232(SO-16) ST3232ECDR		CVIST3232ECDR		
	IC35	00D2631288901	I.C , REGULATOR (LOW POWER LOSS,5V,DPAK-5) PQ050DNA1ZPH		CVIPQ050DNA1ZPH		
	IC36	943239011300S	Reset IC (3V, SSOP5) CVIBD4730G		CVIBD4730G		
	IC37	943249011290S	I.C EEPROM(256K, 32-kword x 8 bit) R1EX24256ASAS0A		CVIR1EX24256ASAS0A		
	IC81	8R2431005500S	I.C , OLED DRIVER ANAM1526NT		CVIANAM1526NT		
	IC83	943231011200S	2A Low Drop Regulator (HRP-5) BA00DD0WHFP		CVIBA00DD0WHFP		
	IC91	90M-HC900150R	I.C , REGULATOR(SOT-223) KIA1117S/F33		CVIKIA1117S33		
	IC92	231810041507S	IC , DCDC Converter (3.5A, SOP8) SI-8005Q		CVISI8005QTL		
	IC95	943235003220S	IC, CooLSET ICE3B0365J		CVIICE3B0365J		
	IC96	90M-HW100710R	I.C , PHOTO COUPLER PC-17L1CB		HVIPC17L1CB		
	IC99	90M-HC300770R	I.C , REGULATOR KIA431BAT		HVIKIA431BAT		
	IC106	00D2757001907	MOSFET (P-CH, 2.5V POWER TRENCH) FDC608PZ	N	CVTFDC608PZ		
	IC501	245810020608D	IC , DSP(333MHz, LQFP-208PIN) ADSP21367KSDZ2A		CVIADSP21367KSWZ2A		
	IC502	231810051504S	I.C , DC-DC CONVERTER (1A,QFN-20P) EN5311QI		CVIEN5311QI		
	IC504	8R2481006800S	I.C , FLASH (16Mbit, TSOP-48) EN29LV160BB-70TIP		CVIEN29LV160BB-70TIP		*
	IC505	231810041507S	IC , DCDC Converter (3.5A, SOP8) SI-8005Q		CVISI8005QTL		
	IC902	00D2622519906	I.C , NAND GATE(POSITIVE, TSSOP-14) SN74LV00APWR		CVISN74LV00APW		
	IC903	00D2623077900	IC , HEX INVERTER		HVITC74VHCU04FT		
	IC910	239810048601S	I.C , USB DAC(LQFP-48) TE7022L		CVITE7022LDS		
⚠	IC911	90M-HW100710R	I.C , PHOTO COUPLER PC-17L1CB		HVIPC17L1CB		
	IC912	00MHC1043399Z	AT24C08BN-SH-T		CVIM24C16WMN6TP		
	Q109	90M-HX800010R	T.R , CHIP , SOT-23 KRA102S	N	HVTKRC102S		
	Q201	nsp	T.R , CHIP , SOT-23 KRC107S		HVTKRC107S		
	Q211	nsp	T.R , CHIP , SOT-23. KRA102S	N	HVTKRA102S		
	Q212	nsp	T.R , CHIP , SOT-23 KRA102S	N	HVTKRC102S		
	Q301	nsp	T.R , CHIP , SOT-23 KRA102S		HVTKRC102S		
	Q302	nsp	T.R , CHIP , SOT-23. KRA102S		HVTKRA102S		
	Q303	00D2730317906	T.R , 2SC2458BL (NPN, 2-4E1A, AUDIO) 2SC2458BL		CVT2SC2458BL		
	Q304	nsp	T.R , CHIP , SOT-23. KRA102S		HVTKRA102S		
	Q309	00D2710326904	T.R,2SA1954(PNP,2-2E1A,SWITCHING) 2SA1954		CVT2SA1954		
	Q310	nsp	T.R , CHIP , SOT-23 KRA102S		HVTKRC102S		
	Q503	nsp	T.R , CHIP , SOT-23. KRA102S		HVTKRA102S		
	Q504	nsp	T.R , CHIP , SOT-23 KRA102S		HVTKRC102S		
	Q505	nsp	T.R , CHIP , SOT-23. KRA102S		HVTKRA102S		

NOTE :
When update Firmware, please confirm a last version in SDI.
Use the service board after updating it.

	Ref. No.	Part No.	Part Name	Remarks		Q'ty	New
	Q506	nsp	T.R , CHIP , SOT-23 KRA102S		HVTKRC102S		
	Q801	nsp	T.R , CHIP , SOT-23. KRA102S		HVTKRA102S		
	Q802	nsp	T.R , CHIP , SOT-23 KRA102S		HVTKRC102S		
	Q803	nsp	T.R , CHIP , SOT-23. KRA102S		HVTKRA102S		
	Q804	nsp	T.R , CHIP , SOT-23 KRA102S		HVTKRC102S		
	Q805	nsp	T.R , CHIP , SOT-23. KRA102S		HVTKRA102S		
	Q806	nsp	T.R , CHIP , SOT-23 KRA102S		HVTKRC102S		
	Q807	nsp	T.R , CHIP , SOT-23. KRA102S		HVTKRA102S		
	Q808	nsp	T.R , CHIP , SOT-23 KRA102S		HVTKRC102S		
	Q809	nsp	T.R , CHIP , SOT-23. KRA102S		HVTKRA102S		
	Q810	nsp	T.R , CHIP , SOT-23 KRA102S		HVTKRC102S		
	Q811	nsp	T.R , CHIP , SOT-23. KRA102S		HVTKRA102S		
	Q812	nsp	T.R , CHIP , SOT-23 KRA102S		HVTKRC102S		
	Q813	00D2757001907	MOSFET (P-CH, 2.5V POWER TRENCH) FDC608PZ		CVTFDC608PZ		
	Q900	nsp	T.R , CHIP , SOT-23 KRC111S		HVTKRC111S		
	Q901	943216012150S	T.R , KTD1863 (NPN, TO-92L, GENERAL, KEC) KTD1863ATP		CVTKTD1863ATP		*
	Q904	90M-HT800050R	T.R KTC3198Y		HVTKTC3198YT		
	Q905,906	nsp	T.R , CHIP , SOT-23 KRA102S		HVTKRC102S		
	Q907	nsp	T.R , CHIP , SOT-23. KRA102S		HVTKRA102S		
	Q910	90M-HT800050R	T.R KTC3198Y		HVTKTC3198YT		
	Q920	nsp	T.R , CHIP , SOT-23 KRA102S		HVTKRC102S		
	Q921	00D2690246900	DTC123EKA		HVTKRC117S		
	Q930-933	nsp	T.R , CHIP , SOT-23 KRA102S		HVTKRC102S		
	D104	nsp	DIODE , CHIP KDS160-RTK/P	N	CVDKDS160RTKP		
	D105,106	90M-HD201750R	DIODE , RECT 1N4003		CVD1N4003SRT		
	D107	nsp	DIODE , CHIP KDS160-RTK/P		CVDKDS160RTKP		
	D301-303	nsp	DIODE , CHIP KDS160-RTK/P		CVDKDS160RTKP		
	D313,314	nsp	DIODE , CHIP KDS160-RTK/P		CVDKDS160RTKP		
	D557	nsp	DIODE , SCHOTTKY (40V,3A, DO-214AC) DELTA SS34SR		CVDSS34SR		
	D800	00D2760761904	DIODE , ZENER 9.1V ZJ9.1BT(26MM T)		CVDZJ9.1BT		
	D801	90M-HI101090R	L.E.D , 2COLOR(RED/GREEN) SPR-39MVW3		HVDSPR39MVW3		
	D802-804	90M-HI101040R	L.E.D , RED SLR342VCTB7T089		HVD342VCTB7T089		
	D810	90M-HD302450R	DIODE , ZENER ZJ13B 1/2W		CVDZJ13BT		
	D811	943202000940S	DIODE , ZENER 16V ZJ16B 1/2W		CVDZJ16BT		
	D812,813	nsp	DIODE , CHIP KDS160-RTK/P		CVDKDS160RTKP		
	D814	90M-HD302450R	DIODE , ZENER ZJ13B 1/2W		CVDZJ13BT		
	D901,902	nsp	DIODE , CHIP KDS160-RTK/P		CVDKDS160RTKP		
	D906-909	90M-HD201750R	DIODE , RECT 1N4003		CVD1N4003SRT		
⚠	D910-913	943203003150S	DIODE 1N4007		HVD1N4007T		
	D918	943209005450M	DIODE , RECT(2A) 2A04-13		HVD2A04H		
	D921	nsp	DIODE , ZENER MTZJ20B 1/2W		HVDMTZJ20BT		
	D923	00MHZ21303210	DIODE , CHIP , SWITCHING 1SS355		CVD1SS355T		
	D928	00MHZ21303210	DIODE , CHIP , SWITCHING 1SS355		CVD1SS355T		
	D930-932	943209005450M	DIODE , RECT(2A) 2A04-13		HVD2A04H		
	D940	nsp	DIODE , CHIP KDS160-RTK/P		CVDKDS160RTKP		
	D941	nsp	DIODE , ZENER(CHIP,2.7V) UDZSTE-172.7B		HVDUDZS2.7BSR		
	D942	943203003150S	DIODE 1N4007		HVD1N4007T		
	D944	nsp	DIODE , SCHOTTKY (40V,3A, DO-214AC) DELTA SS34SR		CVDSS34SR		
	D950	nsp	DIODE , CHIP KDS160-RTK/P		CVDKDS160RTKP		

	Ref. No.	Part No.	Part Name	Remarks		Q'ty	New
	D952	nsp	DIODE , CHIP KDS160-RTK/P		CVDKDS160RTKP		
	D957	90M-HD201870R	DIODE , SCHOTTKY UF4007		HVDUF4007T		
	D958	90M-HD201860R	DIODE , SCHOTTKY UF4004		HVDUF4004T		
	D959	nsp	DIODE , ZENER MTZJ20B 1/2W		HVDMTZJ20BT		
	D960	90M-HD201990R	DIODE 31DQ06H		HVD31DQ06H		
	D961,962	00MHD20059100	DIODE , SCHOTTKY 21DQ10(100V/2A)		HVD21DQ10T		
	D963	943202000940S	DIODE , ZENER 16V ZJ16B 1/2W		CVDZJ16BT		
	D970	00D2760761904	DIODE , ZENER 9.1V ZJ9.1BT(26MM T)		CVDZJ9.1BT		
OTHER PATRS GROUP							
⚠	R991-993	nsp	RES , CHIP , 750K OHM, 5% , 1/8W		CRJ18AJ754T		
CAPACITORS GROUP							
	C159	nsp	CER. CAP. 2200PF 50V KC	N	CCUS1H222KC		
	C160	nsp	CAP , ELECT 47UF 16V		CCEA1CH470T		
	C161,162	nsp	CAP , CHIP (1608, 50V/0.1uF)	N	CCUS1H104KC		
	C169	nsp	CAP , ELECT 100UF 16V		CCEA1CH101T		
	C170	nsp	CAP , CHIP (1608, 50V/0.01uF)	N	CCUS1H103KC		
	C171	nsp	CAP , ELECT 100UF 25V		CCEA1EH101T		
	C172	nsp	CAP , CHIP (1608, 50V/0.01uF)	N	CCUS1H103KC		
	C174-176	nsp	CAP , CHIP (1608, 50V/0.1uF)	N	CCUS1H104KC		
	C185	nsp	CAP , CHIP (1608, 50V/0.1uF)	N	CCUS1H104KC		
	C188	nsp	CAP , CHIP (1608, 50V/1000pF)	N	CCUS1H102KC		
	C189	nsp	CAP , CHIP (1608, 50V/0.01uF)	N	CCUS1H103KC		
	C190	nsp	CAP , ELECT 100UF 16V		CCEA1CH101T		
	C192	nsp	CAP , CHIP (1608, 50V/0.1uF)	N	CCUS1H104KC		
	C193	nsp	CAP , CHIP (1608, 50V/0.01uF)	N	CCUS1H103KC		
	C194	nsp	CAP , CHIP (1608, 50V/1000pF)	N	CCUS1H102KC		
	C195	nsp	CAP , CHIP (1608, 50V/0.1uF)		CCUS1H104KC		
	C196	nsp	CAP , CHIP (1608, 50V/0.01uF)		CCUS1H103KC		
	C197	nsp	CAP , CHIP (1608, 50V/1000pF)		CCUS1H102KC		
	C201	nsp	CAP , CHIP (1608, 50V/0.1uF)		CCUS1H104KC		
	C202	nsp	CAP , ELECT 10UF 50V		CCEA1HH100T		
	C203	nsp	CAP , CHIP (1608, 50V/1000pF)		CCUS1H102KC		
	C204	nsp	CAP , CHIP (1608, 50V/0.1uF)		CCUS1H104KC		
	C207	nsp	CAP , CHIP (1608, 50V/0.1uF)		CCUS1H104KC		
	C208	nsp	CAP , CHIP (1608, 50V/1000pF)		CCUS1H102KC		
	C209	nsp	CAP , CHIP (1608, 50V/0.1uF)		CCUS1H104KC		
	C210	nsp	CAP , CHIP (1608, 50V/1000pF)		CCUS1H102KC		
	C211	nsp	CAP , CHIP (1608, 50V/0.1uF)		CCUS1H104KC		
	C212	nsp	CAP , CHIP (1608, 50V/1000pF)		CCUS1H102KC		
	C213	nsp	CAP , CHIP (1608, 50V/0.01uF)		CCUS1H103KC		
	C214	nsp	CAP , ELECT 47UF 10V		CCEA1AH470T		
	C215	nsp	CAP , CHIP (1608, 50V/0.1uF)		CCUS1H104KC		
	C216	nsp	CAP , CHIP (1608, 50V/1000pF)		CCUS1H102KC		
	C217	nsp	CAP , ELECT 47UF 10V		CCEA1AH470T		
	C218,219	nsp	CAP , CHIP (1608, 50V/0.1uF)		CCUS1H104KC		
	C220	nsp	CAP , ELECT 10UF 50V		CCEA1HH100T		
	C221	nsp	CAP , CHIP (1608, 50V/0.1uF)		CCUS1H104KC		
	C222	nsp	CAP , ELECT 10UF 50V		CCEA1HH100T		

	Ref. No.	Part No.	Part Name	Remarks		Q'ty	New
	C223	nsp	CAP , CHIP (1608, 10V/1uF)		CCUS1A105KC		
	C224	nsp	CAP , CHIP (1608, 50V/0.1uF)		CCUS1H104KC		
	C226	nsp	CAP , ELECT 2.2UF 50V		CCEA1HH2R2T		
	C227	nsp	CAP , ELECT 1UF 50V		CCEA1HH1R0T		
	C229	nsp	CAP , CHIP (1608, 10V/1uF)		CCUS1A105KC		
	C230	nsp	CAP , CHIP (1608, 50V/0.1uF)		CCUS1H104KC		
	C231	nsp	CAP , CHIP (1608, 50V/33pF)		CCUS1H330JA		
	C232	nsp	CAP , CHIP (1608, 50V/39pF)		CCUS1H390JA		
	C233	nsp	CAP , ELECT 100UF 10V		CCEA1AH101T		
	C234	nsp	CAP , ELECT 10UF 50V		CCEA1HH100T		
	C235,236	nsp	CAP , CHIP (1608, 50V/0.1uF)		CCUS1H104KC		
	C239	nsp	CAP , ELECT 10UF 50V		CCEA1HH100T		
	C240	nsp	CAP , CHIP (1608, 50V/0.1uF)		CCUS1H104KC		
	C241-246	nsp	CAP , ELECT 1UF 50V		CCEA1HH1R0T		
	C254	nsp	CAP , CHIP (1608, 50V/0.1uF)		CCUS1H104KC		
	C255	nsp	CAP , ELECT 47UF 25V		CCEA1EH470T		
	C256-258	nsp	CAP , CHIP (1608, 50V/0.1uF)		CCUS1H104KC		
	C259,260	nsp	CAP , CHIP (1608, 50V/100pF)		CCUS1H101JA		
	C261	nsp	CAP , ELECT 47UF 25V		CCEA1EH470T		
	C262	nsp	CAP , CHIP (1608, 50V/0.1uF)		CCUS1H104KC		
	C265	nsp	CAP , CHIP (1608, 50V/0.1uF)		CCUS1H104KC		
	C266	nsp	CAP , ELECT 47UF 25V		CCEA1EH470T		
	C269,270	nsp	CAP , ELECT 10UF 50V		CCEA1HH100T		
	C271,272	nsp	CAP , CHIP (1608, 50V/100pF)		CCUS1H101JA		
	C280	nsp	CAP , ELECT 10UF 50V		CCEA1HH100T		
	C281,282	nsp	CAP , CHIP (1608, 50V/0.1uF)		CCUS1H104KC		
	C283	nsp	CAP , CHIP (1608, 50V/0.01uF)		CCUS1H103KC		
	C284	nsp	CAP , CHIP (1608, 50V/1000pF)		CCUS1H102KC		
	C290	nsp	CAP , CHIP (1608, 50V/0.1uF)		CCUS1H104KC		
	C291	nsp	CAP , CHIP (1608, 50V/0.01uF)		CCUS1H103KC		
	C292	nsp	CAP , CHIP (1608, 50V/1000pF)		CCUS1H102KC		
	C301,302	nsp	CAP , CHIP (1608, 50V/0.1uF)		CCUS1H104KC		
	C303	nsp	CAP , ELECT 470UF 10V		CCEA1AH471T		
	C304,305	nsp	CAP , CHIP (1608, 50V/0.1uF)		CCUS1H104KC		
	C306	nsp	CAP , CHIP (1608, 50V/470pF)		CCUS1H471JA		
	C313	nsp	CAP , CHIP (1608, 50V/0.01uF)		CCUS1H103KC		
	C314	nsp	CAP , CHIP (1608, 50V/0.1uF)		CCUS1H104KC		
	C315	nsp	CAP , CHIP (1608, 50V/1000pF)		CCUS1H102KC		
	C316	nsp	CAP , CHIP (1608, 50V/0.01uF)		CCUS1H103KC		
	C317	nsp	CAP , CHIP (1608, 50V/0.1uF)		CCUS1H104KC		
	C318	nsp	CAP , CHIP (1608, 50V/1000pF)		CCUS1H102KC		
	C319	nsp	CAP , CHIP (1608, 50V/0.01uF)		CCUS1H103KC		
	C320	nsp	CAP , CHIP (1608, 50V/0.1uF)		CCUS1H104KC		
	C321	nsp	CAP , CHIP (1608, 50V/1000pF)		CCUS1H102KC		
	C333	nsp	CAP , ELECT 4.7UF 50V		CCEA1HH4R7T		
	C334	nsp	CAP , CHIP (1608, 50V/0.1uF)		CCUS1H104KC		
	C335	nsp	CAP , CHIP (1608, 50V/1000pF)		CCUS1H102KC		
	C336	nsp	CAP , CHIP (1608, 50V/0.1uF)		CCUS1H104KC		
	C337,338	nsp	CAP , CHIP (1608, 50V/0.01uF)		CCUS1H103KC		
	C339	nsp	CAP , ELECT 100UF 16V		CCEA1CH101T		
	C340	nsp	CAP , CHIP (1608, 50V/220pF)		CCUS1H221JA		
	C341	nsp	CAP , CHIP (1608, 50V/0.1uF)		CCUS1H104KC		

	Ref. No.	Part No.	Part Name	Remarks		Q'ty	New
	C342	nsp	CAP , CHIP (1608, 50V/1000pF)		CCUS1H102KC		
	C343	nsp	CAP , CHIP (1608, 50V/220pF)		CCUS1H221JA		
	C344	nsp	CAP , CHIP (1608, 50V/0.1uF)		CCUS1H104KC		
	C345	nsp	CAP , CHIP (1608, 50V/1000pF)		CCUS1H102KC		
	C346,347	nsp	CAP , CHIP (1608, 50V/100pF)		CCUS1H101JA		
	C348	nsp	CAP , ELECT 10UF 50V		CCEA1HH100T		
	C349-352	nsp	CAP , CHIP (1608, 50V/0.1uF)		CCUS1H104KC		
	C353	nsp	CAP , ELECT 10UF 50V		CCEA1HH100T		
	C354	nsp	CAP , CHIP (1608, 50V/0.1uF)		CCUS1H104KC		
	C355	nsp	CAP , CHIP (1608, 50V/1000pF)		CCUS1H102KC		
	C357,358	nsp	CER. CAP. 4.7uF 10V		CCUS1A475KC		
	C360,361	nsp	CER. CAP. 4.7uF 10V		CCUS1A475KC		
	C368-370	nsp	CAP , CHIP (1608, 50V/1000pF)		CCUS1H102KC		
	C371	nsp	CAP , CHIP (1608, 50V/0.1uF)		CCUS1H104KC		
	C372	nsp	CAP , CHIP (1608, 50V/1000pF)		CCUS1H102KC		
	C373	nsp	CAP , CHIP (1608, 50V/0.1uF)		CCUS1H104KC		
	C374	nsp	CAP , CHIP (1608, 50V/1000pF)		CCUS1H102KC		
	C375	nsp	CAP , CHIP (1608, 50V/0.1uF)		CCUS1H104KC		
	C376	nsp	CAP , CHIP (1608, 50V/0.01uF)		CCUS1H103KC		
	C377	nsp	CAP , CHIP (1608, 50V/1000pF)		CCUS1H102KC		
	C388	nsp	CER. CAP. 4.7uF 25V		CCUC1E475KC		
	C389	nsp	CAP , CHIP (1608, 50V/0.1uF)		CCUS1H104KC		
	C499,500	nsp	CAP , ELECT 10UF 50V		CCEA1HH100T		
	C503	nsp	CAP , ELECT 100UF 10V		CCEA1AH101T		
	C504	nsp	CAP, CHIP (4.7uF/25V, 2012, MURATA GRM21)		CCUMUC1E475KC		
	C505	nsp	CAP , CHIP (1608, 50V/0.1uF)		CCUS1H104KC		
	C506,507	nsp	CAP, CHIP (4.7uF/25V, 2012, MURATA GRM21)		CCUMUC1E475KC		
	C508	nsp	CAP , CHIP (1608, 50V/0.1uF)		CCUS1H104KC		
	C509	nsp	CAP , CHIP (1608, 50V/1000pF)		CCUS1H102KC		
	C510	nsp	CAP , CHIP (1608, 50V/0.1uF)		CCUS1H104KC		
	C511	nsp	CAP , CHIP (1608, 50V/1000pF)		CCUS1H102KC		
	C512	nsp	CAP , CHIP (1608, 50V/0.1uF)		CCUS1H104KC		
	C513-515	nsp	CAP , CHIP (1608, 50V/1000pF)		CCUS1H102KC		
	C516-518	nsp	CAP , CHIP (1608, 50V/0.1uF)		CCUS1H104KC		
	C519	nsp	CAP , CHIP (1608, 50V/1000pF)		CCUS1H102KC		
	C520	nsp	CAP , CHIP (1608, 50V/0.1uF)		CCUS1H104KC		
	C521	nsp	CAP , CHIP (1608, 50V/1000pF)		CCUS1H102KC		
	C522,523	nsp	CAP , CHIP (1608, 50V/0.1uF)		CCUS1H104KC		
	C524	nsp	CAP , CHIP (1608, 50V/1000pF)		CCUS1H102KC		
	C525	nsp	CAP , CHIP (1608, 50V/0.1uF)		CCUS1H104KC		
	C526	nsp	CAP , CHIP (1608, 50V/1000pF)		CCUS1H102KC		
	C527,528	nsp	CER. CAP. 4.7uF 25V		CCUC1E475KC		
	C529-531	nsp	CAP , CHIP (1608, 50V/100pF)		CCUS1H101JA		
	C532-534	nsp	CAP , CHIP (1608, 50V/0.1uF)		CCUS1H104KC		
	C535	nsp	CAP , ELECT 100UF 10V		CCEA1AH101T		
	C536	nsp	CAP , CHIP (1608, 50V/0.1uF)		CCUS1H104KC		
	C537	nsp	CAP , CHIP (1608, 50V/1000pF)		CCUS1H102KC		
	C538	nsp	CAP , CHIP (1608, 50V/0.1uF)		CCUS1H104KC		
	C539	nsp	CAP , CHIP (1608, 50V/1000pF)		CCUS1H102KC		
	C540,541	nsp	CAP , CHIP (1608, 50V/0.1uF)		CCUS1H104KC		
	C542,543	nsp	CAP , CHIP (1608, 50V/9pF)		CCUS1H090DA		
	C544,545	nsp	CER. CAP. 4.7uF 25V		CCUC1E475KC		

	Ref. No.	Part No.	Part Name	Remarks		Q'ty	New
	C547	nsp	CAP , CHIP (1608, 50V/0.1uF)		CCUS1H104KC		
	C548,549	nsp	CAP , ELECT 100UF 10V		CCEA1AH101T		
	C550	nsp	CAP , CHIP (1608, 50V/0.1uF)		CCUS1H104KC		
	C551	nsp	CAP , CHIP (1608, 50V/1000pF)		CCUS1H102KC		
	C552	nsp	CAP , CHIP (1608, 50V/0.1uF)		CCUS1H104KC		
	C553	nsp	CAP , CHIP (1608, 50V/1000pF)		CCUS1H102KC		
	C554-557	nsp	CAP , CHIP (1608, 50V/0.1uF)		CCUS1H104KC		
	C558	nsp	CAP , CHIP (1608, 50V/1000pF)		CCUS1H102KC		
	C559	nsp	CAP , CHIP (1608, 50V/0.1uF)		CCUS1H104KC		
	C560	nsp	CAP , CHIP (1608, 50V/1000pF)		CCUS1H102KC		
	C561-564	nsp	CAP , CHIP (1608, 50V/0.1uF)		CCUS1H104KC		
	C565	nsp	CAP , CHIP (1608, 50V/1000pF)		CCUS1H102KC		
	C566	nsp	CAP , CHIP (1608, 50V/0.1uF)		CCUS1H104KC		
	C567	nsp	CAP , CHIP (1608, 50V/1000pF)		CCUS1H102KC		
	C568,569	nsp	CAP , CHIP (1608, 50V/0.1uF)		CCUS1H104KC		
	C570	nsp	CAP , CHIP (1608, 50V/1000pF)		CCUS1H102KC		
	C571-577	nsp	CAP , CHIP (1608, 50V/0.1uF)		CCUS1H104KC		
	C578	00D2544711918	CE04W1A221MT F11(KY)		CCEA1CMEAX221T		
	C579	00D2544712700	CE04W1C471MC JC5(KY)		CCEA1CMEWXL471T		
	C580	nsp	CAP , CHIP (1608, 50V/1000pF)		CCUS1H102KC		
	C581	nsp	CAP , CHIP (1608, 50V/0.01uF)		CCUS1H103KC		
	C582,583	nsp	CAP , CHIP (3225, 16V/47uF)		CCUR1C476KC		
	C584,585	nsp	CAP , CHIP (1608, 50V/1000pF)		CCUS1H102KC		
	C586	nsp	CAP , CHIP (1608, 50V/180pF)		CCUS1H181JA		
	C587	nsp	CAP , CHIP (1608, 50V/0.1uF)		CCUS1H104KC		
	C588	nsp	CAP , CHIP (1608, 50V/0.01uF)		CCUS1H103KC		
	C589	nsp	CAP , CHIP (1608, 50V/1000pF)		CCUS1H102KC		
	C590	nsp	CAP , CHIP (1608, 50V/0.01uF)		CCUS1H103KC		
	C591	00D2544372713	CE04W1V102MHRC(KME)		CCEA1VMEWX102E		
	C600	00D2544712700	CE04W1C471MC JC5(KY)		CCEA1CMEWXL471T		
	C623,624	nsp	CAP , CHIP (1608, 50V/0.1uF)		CCUS1H104KC		
	C626	nsp	CAP , CHIP (1608, 50V/0.1uF)		CCUS1H104KC		
	C631-643	nsp	CAP , CHIP (1608, 50V/0.1uF)		CCUS1H104KC		
	C644	nsp	CAP , CHIP (1608, 50V/0.01uF)		CCUS1H103KC		
	C655	nsp	CAP , CHIP (1608, 50V/1000pF)		CCUS1H102KC		
	C663	nsp	CAP , CHIP (1608, 50V/0.1uF)		CCUS1H104KC		
	C664	nsp	CAP , ELECT(220uF/6.3V)		CCEA0JKS221T		
	C669	nsp	CAP , CHIP (1608, 50V/0.1uF)		CCUS1H104KC		
	C670	nsp	CAP , CHIP (1608, 50V/1000pF)		CCUS1H102KC		
	C671	nsp	CAP , CHIP (1608, 50V/0.01uF)		CCUS1H103KC		
	C672	nsp	CAP , ELECT 220UF 10V		CCEA1AKS221T		
	C700	nsp	CAP , CHIP (1608, 50V/0.1uF)		CCUS1H104KC		
	C701	nsp	CAP , CHIP (1608, 50V/1000pF)		CCUS1H102KC		
	C702	nsp	CAP , CHIP (1608, 50V/0.01uF)		CCUS1H103KC		
	C703	nsp	CAP , CHIP (1608, 50V/0.1uF)		CCUS1H104KC		
	C704	nsp	CAP , CHIP (1608, 50V/1000pF)		CCUS1H102KC		
	C705	nsp	CAP , CHIP (1608, 50V/0.01uF)		CCUS1H103KC		
	C706	nsp	CAP , CHIP (1608, 50V/0.1uF)		CCUS1H104KC		
	C707	nsp	CAP , CHIP (1608, 50V/1000pF)		CCUS1H102KC		
	C708,709	nsp	CAP , CHIP (1608, 50V/0.01uF)		CCUS1H103KC		
	C710	nsp	CAP , CHIP (1608, 50V/1000pF)		CCUS1H102KC		
	C711	nsp	CAP , CHIP (1608, 50V/0.1uF)		CCUS1H104KC		

	Ref. No.	Part No.	Part Name	Remarks		Q'ty	New
	C712	nsp	CAP , CHIP (1608, 50V/0.01uF)		CCUS1H103KC		
	C713	nsp	CAP , CHIP (1608, 50V/1000pF)		CCUS1H102KC		
	C714	nsp	CAP , CHIP (1608, 50V/0.1uF)		CCUS1H104KC		
	C715	nsp	CAP , CHIP (1608, 50V/0.01uF)		CCUS1H103KC		
	C716	nsp	CAP , CHIP (1608, 50V/1000pF)		CCUS1H102KC		
	C717	nsp	CAP , CHIP (1608, 50V/0.1uF)		CCUS1H104KC		
	C801,802	nsp	CAP , CHIP (1608, 50V/0.1uF)		CCUS1H104KC		
	C803	nsp	CER. CAP. 4.7uF 25V		CCUC1E475KC		
	C805	nsp	CAP , CHIP (1608, 50V/1000pF)		CCUS1H102KC		
	C806	nsp	CAP , CHIP (1608, 50V/0.1uF)		CCUS1H104KC		
	C808,809	nsp	CER. CAP. 4.7uF 10V		CCUS1A475KC		
	C816	nsp	CAP , CHIP (1608, 50V/0.1uF)		CCUS1H104KC		
	C817	nsp	CAP , CHIP (1608, 50V/0.01uF)		CCUS1H103KC		
	C818	nsp	CAP , CHIP (1608, 50V/1000pF)		CCUS1H102KC		
	C819	nsp	CAP , CHIP (1608, 50V/100pF)		CCUS1H101JA		
	C820	nsp	CAP , CHIP (1608, 50V/0.1uF)		CCUS1H104KC		
	C821	nsp	CAP , CHIP (1608, 50V/0.01uF)		CCUS1H103KC		
	C822	nsp	CAP , CHIP (1608, 50V/1000pF)		CCUS1H102KC		
	C823	nsp	CAP , CHIP (1608, 50V/100pF)		CCUS1H101JA		
	C827	nsp	CAP , CHIP(2012, 1uF/50V)		CCUC1H105KC		
	C828,829	nsp	CAP, CHIP (1uF/25V, 1608, MURATA GRM18)		CCUS1E105KC		
	C830	nsp	CAP , CHIP (1608, 50V/1000pF)		CCUS1H102KC		
	C831,832	nsp	CER. CAP. 4.7uF 25V		CCUC1E475KC		
	C833	nsp	CAP , ELECT 10UF 50V KS		CCEA1HKS100T		
	C834	nsp	CAP , CHIP (1608, 50V/0.1uF)		CCUS1H104KC		
	C835	nsp	CAP , CHIP (1608, 50V/0.01uF)		CCUS1H103KC		
	C836,837	nsp	CAP , CHIP (1608, 50V/0.1uF)		CCUS1H104KC		
	C838	nsp	CAP , CHIP (1608, 50V/1000pF)		CCUS1H102KC		
	C839	nsp	CAP , CHIP (1608, 50V/0.1uF)		CCUS1H104KC		
	C840	nsp	CAP , ELECT 0.47UF 50V SMALL SIZE		CCEA1HKSR47T		
	C841	nsp	CAP , CHIP (1608, 50V/0.01uF)		CCUS1H103KC		
	C842	nsp	CAP , ELECT 47UF 35V		CCEA1VKS470T		
	C846	nsp	CAP , CHIP (1608, 50V/0.1uF)		CCUS1H104KC		
	C847	nsp	CAP , CHIP(2012 SIZE)		CCUC1A475ZF		
	C849	nsp	CAP , CHIP (1608, 50V/0.1uF)		CCUS1H104KC		
	C850	nsp	CAP , ELECT 220UF 10V		CCEA1AKS221T		
	C851-854	nsp	CAP , CHIP (1608, 50V/0.1uF)		CCUS1H104KC		
	C855	nsp	CAP , CHIP (1608, 50V/0.01uF)		CCUS1H103KC		
	C856	nsp	CAP , CHIP (1608, 50V/1000pF)		CCUS1H102KC		
	C857	nsp	CAP , CHIP (1608, 50V/0.1uF)		CCUS1H104KC		
	C858	nsp	CAP , CHIP (1608, 50V/0.01uF)		CCUS1H103KC		
	C859	nsp	CAP , CHIP (1608, 50V/1000pF)		CCUS1H102KC		
	C860	nsp	CAP , CHIP (1608, 50V/0.1uF)		CCUS1H104KC		
	C861	nsp	CAP , CHIP (1608, 50V/0.01uF)		CCUS1H103KC		
	C862	nsp	CAP , CHIP (1608, 50V/1000pF)		CCUS1H102KC		
	C880	nsp	RES , CHIP(0 OHM , 5% , 1608)		CRJ10DJ0R0T		
	C881	nsp	CAP , CHIP (1608, 50V/0.1uF)		CCUS1H104KC		
	C882	nsp	CAP , CHIP (1608, 50V/0.01uF)		CCUS1H103KC		
	C883,884	nsp	CAP , CHIP (1608, 50V/1000pF)		CCUS1H102KC		
	C885	nsp	CAP , CHIP (1608, 50V/0.01uF)		CCUS1H103KC		
	C886	nsp	CAP , CHIP (1608, 50V/0.1uF)		CCUS1H104KC		
	C887	nsp	CAP , CHIP (1608, 50V/1000pF)		CCUS1H102KC		

	Ref. No.	Part No.	Part Name	Remarks		Q'ty	New
	C888	nsp	CAP , CHIP (1608, 50V/0.01uF)		CCUS1H103KC		
	C889	nsp	CAP , CHIP (1608, 50V/0.1uF)		CCUS1H104KC		
	C896,897	nsp	CAP , CHIP (1608, 50V/1000pF)		CCUS1H102KC		
	C898	nsp	CAP , CHIP (1608, 50V/0.01uF)		CCUS1H103KC		
	C899	nsp	CAP , CHIP (1608, 50V/1000pF)		CCUS1H102KC		
	C900	nsp	CAP , CHIP (1608, 50V/0.01uF)		CCUS1H103KC		
	C901	nsp	CAP , CHIP (1608, 50V/0.1uF)		CCUS1H104KC		
	C902	nsp	CAP , CHIP (1608, 50V/22pF)		CCUS1H220JA		
⚠	C903	nsp	CAP , ELECT(KRH, 450V/22UF, 12.5X25)		CCET450VKRH220KS		
	C904,905	nsp	CAP , CHIP (1608, 50V/0.1uF)		CCUS1H104KC		
	C906,907	00D2544569911	CE04W1E470MT(RA3)		CCEA1ERA38P470T		
	C908	nsp	CAP , CHIP (1608, 50V/0.1uF)		CCUS1H104KC		
	C909	00D2544569911	CE04W1E470MT(RA3)		CCEA1ERA38P470T		
	C910,911	nsp	CAP , CHIP (1608, 50V/0.1uF)		CCUS1H104KC		
	C912,913	00D2544569911	CE04W1E470MT(RA3)		CCEA1ERA38P470T		
	C914	nsp	CAP , CHIP (1608, 50V/0.1uF)		CCUS1H104KC		
	C915	nsp	CAP , ELECT 3300UF/35V		CCEA1VH332E		
	C916	nsp	CAP , CHIP (1608, 50V/0.1uF)		CCUS1H104KC		
	C918	nsp	CAP , CHIP (1608, 50V/0.1uF)		CCUS1H104KC		
	C919	nsp	CAP , CHIP (1608, 50V/22pF)		CCUS1H220JA		
	C920	nsp	CAP , CHIP KDS160-RTK/P		CCUC1H474KC		
	C921	nsp	CAP , CHIP ELECT 10UF / 16V		HCEC1CRV2100T		
	C922,923	nsp	CAP , CHIP (1608, 50V/0.01uF)		CCUS1H103KC		
	C924,925	nsp	CAP , CHIP (1608, 50V/0.1uF)		CCUS1H104KC		
	C926	nsp	CAP , CHIP (1608, 50V/47pF)		CCUS1H470JA		
	C928	nsp	CAP , CHIP (1608, 50V/0.1uF)		CCUS1H104KC		
	C929	nsp	CAP , CHIP (1608, 50V/1000pF)		CCUS1H102KC		
	C930	nsp	CAP , CHIP (1608, 50V/0.01uF)		CCUS1H103KC		
	C931	nsp	CAP , CHIP (1608, 50V/1000pF)		CCUS1H102KC		
	C932	nsp	CAP , CHIP (1608, 50V/0.1uF)		CCUS1H104KC		
	C933	nsp	CAP , ELECT 6800UF 35V		CCET35VKL5682NK		
	C934	nsp	CAP , CHIP (1608, 50V/0.1uF)		CCUS1H104KC		
	C935,936	nsp	CAP , CHIP (3225, 16V/47uF)		CCUR1C476KC		
	C937	00D2544569924	CE04W1E101MT(RA3)		CCEA1ERA38P101T		
	C938	nsp	CAP , CHIP (1608, 50V/0.1uF)		CCUS1H104KC		
	C939	nsp	CAP , CHIP (1608, 50V/1000pF)		CCUS1H102KC		
	C940	nsp	CAP , CHIP (1608, 50V/0.1uF)		CCUS1H104KC		
	C941	nsp	CAP , ELECT 2200UF 25V		CCEA1EH222E		
	C942	nsp	CAP , CHIP (1608, 50V/0.022uF)		CCUS1H223KC		
	C943	nsp	CAP , CHIP (1608, 50V/0.1uF)		CCUS1H104KC		
	C944	nsp	CAP , ELECT 470UF 16V ZF		CCEA1CH471T		
	C945	00D2544569911	CE04W1E470MT(RA3)		CCEA1ERA38P470T		
	C946	nsp	CAP , CHIP (1608, 50V/0.1uF)		CCUS1H104KC		
	C947	nsp	CAP , CHIP (1608, 50V/0.012uF)		CCUS1H123KC		
	C949	134050090208S	CE04W1C102MC J20(KY)		CCEA1AKLH102EKS		
	C950	nsp	CAP , CHIP(2012, 1uF/50V)		CCUC1H105KC		
	C951	nsp	CAP , ELECT 470UF 10V		CCEA1AH471TS		
⚠	C952	nsp	CAP , CERAMIC(X1/Y2/SC) 0.0047UF/2.5KV		KCKDKS472ME		
	C953	nsp	CAP , ELECT 10UF 50V		CCEA1HH100T		
	C954	nsp	CAP , CHIP (1608, 50V/0.1uF)		CCUS1H104KC		
	C956	nsp	CAP , ELECT 100UF 25V		CCEA1EH101T		
	C960	nsp	CAP , ELECT 22UF 50V 105C		CCEA1HH220TS		

	Ref. No.	Part No.	Part Name	Remarks		Q'ty	New
	C961	nsp	CAP , CHIP (1608, 50V/0.01uF)		CCUS1H103KC		
	C962	nsp	CAP , CERAMIC EKR3A222K05FK5		CCKT3A222KBL		
	C963	nsp	CAP , CHIP (1608, 50V/0.1uF)		CCUS1H104KC		
	C967,968	nsp	CAP , CHIP (1608, 50V/22pF)		CCUS1H220JA		
	C969	00D2544712700	CE04W1C471MC JC5(KY)		CCEA1CMEWXL471T		
	C970	00D2544711918	CE04W1A221MT F11(KY)		CCEA1CMEAX221T		
	C971	nsp	CAP , CHIP (1608, 50V/1000pF)		CCUS1H102KC		
	C972	nsp	CAP , CHIP (1608, 50V/0.1uF)		CCUS1H104KC		
	C973	nsp	CAP , CHIP (1608, 50V/1000pF)		CCUS1H102KC		
	C974	00D2544709700	CE04W1V221MC JC5(KY)		CCEA1VMEWXS221T		
	C975	nsp	CAP , CHIP (1608, 50V/0.01uF)		CCUS1H103KC		
	C976	nsp	CAP , CHIP (1608, 50V/1000pF)		CCUS1H102KC		
	C977	nsp	CAP , CHIP (1608, 50V/0.01uF)		CCUS1H103KC		
	C978	nsp	CAP , CHIP (1608, 50V/0.1uF)		CCUS1H104KC		
	C979	nsp	CAP , CHIP (1608, 50V/180pF)		CCUS1H181JA		
	C980	nsp	CAP , CHIP (1608, 50V/1000pF)		CCUS1H102KC		
	C981	nsp	CAP , CHIP KDS160-RTK/P		CCUC1H474KC		
	C982	nsp	CAP , CHIP (1608, 50V/0.1uF)		CCUS1H104KC		
	C983	nsp	CAP , CHIP (1608, 50V/1000pF)		CCUS1H102KC		
	C984	nsp	CAP , CHIP (1608, 50V/0.1uF)		CCUS1H104KC		
	C985	nsp	CAP , CHIP (1608, 50V/1000pF)		CCUS1H102KC		
	C986	nsp	CAP , CHIP (1608, 50V/0.01uF)		CCUS1H103KC		
	C987	nsp	CAP , CHIP (1608, 50V/0.1uF)		CCUS1H104KC		
	C988	nsp	CAP , CHIP (1608, 50V/1000pF)		CCUS1H102KC		
	C989	nsp	CAP , CHIP (1608, 50V/0.01uF)		CCUS1H103KC		
	C990	nsp	CAP , CHIP(2012, 2200PF/50V)		CCUC1H222KC		
	C991	00D2544569911	CE04W1E470MT(RA3)		CCEA1ERA38P470T		
	C992-994	nsp	CAP , CHIP (1608, 50V/0.01uF)		CCUS1H103KC		
	C995	nsp	CAP , ELECT 10UF 16V KS		CCEA1CKS100T		
	C998	nsp	CAP , CHIP (1608, 50V/0.1uF)		CCUS1H104KC		
	C999	nsp	CAP , CHIP (1608, 50V/1000pF)		CCUS1H102KC		
OTHER PATRS GROUP							
	BN82	nsp	WIRE ASS'Y(7P, 2MM, 80MM)		CWB1C00708047		
	BN83	nsp	WIRE ASS'Y(5P, 2MM, 100MM)		CWB1C00510047		
	BN93	nsp	LOCKING TYPE , STRAIGHT WAFER , 2mm		CJP05GI236ZW		
	BN99	nsp	WIRE ASS'Y(8P, 2MM, 120MM)		CWB1C008120NG		
	CM81	943179011170S	OLED MODULE		CFLMXS4003-A		
	CN1	nsp	WAFER, STRSIGHT, 1MM, SMD		CJP30GA193ZY		
	CN01	nsp	WIRE ASS'Y(5P, 2MM, 350MM, SHIELD)		CWB1C905350NG003		
	CN10	nsp	WAFER FCZ100E-11SSK		CJP11GA117ZY		
	CN24	nsp	WAFER FCZ100E-11SSK		CJP11GA117ZY		
	CN31	nsp	WAFER(11P, ST 1.25MM)		CJP11GA115ZY		
	CN32	nsp	WAFER , CARD CABLE (SMD, 1MM)		CJP23GA193ZY		
	CN40	nsp	LOCKING TYPE , STRAIGHT WAFER (2mm)		CJP15GI236ZW		
	CN82	nsp	WAFER (9P LOCK ANGLE 2.0MM)		CJP07GJ247ZW		
	CN83	nsp	LOCKING TYPE , STRAIGHT WAFER , 2mm		CJP05GI236ZW		
	CN84	nsp	WAFER, SMD (30P, 0.5mm, FRONT FLIP)		CJP30GB278ZY		
	CN88	nsp	WAFER, STRSIGHT, 1MM, SMD		CJP30GA193ZY		

	Ref. No.	Part No.	Part Name	Remarks		Q'ty	New
⚠	CN91	nsp	WAFER		CJP02KA060ZY		
	CN92	nsp	WAFER		CJP02GA89ZY		
	CN93	nsp	LOCKING TYPE , STRAIGHT WAFER, 2.5MM		CJP03GI237ZW		
⚠	CX91	9431330030805	CAP , POLYPROPYLENE FILM DMPX224K2SP150B		CCQF2E224KZE		
⚠	CX92	90M-OF100500R	CAP , POLYPROPYLENE FILM DMPX104K2SP150B		HCQF2E104KZE		
⚠	CY91,92	90M-DK100930R	CAP , CERAMIC (400V Y-CAP) SDE102M10FF7		CCKDHS102ME		
⚠	CY94	90M-DK100930R	CAP , CERAMIC (400V Y-CAP) SDE102M10FF7		CCKDHS102ME		
	DL50	90M-HI200020R	INFRARED L.E.D SIR-34ST3F		BVDSIR34ST3F		
	ET21	nsp	BRACKET , PCB		CMD1A569		
	ET61	nsp	BUBBER , IR		CHG1A491		
⚠	F901	00D2061099032	FUSE , 250V/2A		KBA2C2000TLHEY		
⚠	F902	9436520121805	FUSE , 250V/2AL		KBA2D2000TLET		
	FH91,92	nsp	HOLDER , FUSE		KJCFC5S		
	J10	nsp	PALTE , EARTH MET37-0002		HJT1A025		
	J11	nsp	PALTE , EARTH MET37-0002		HJT1A025		
	J15	nsp	PALTE , EARTH MET37-0002		HJT1A025		
	J18	nsp	PALTE , EARTH MET37-0002		HJT1A025		
	J601,602	nsp	RES , CHIP(0 OHM , 5% , 1608)		CRJ10DJ0R0T		
	J903	nsp	RES , CHIP , 0 OHM, 5% , 1/8W , 2012		CRJ18AJ0R0T		
	JK21	9436460008405	JACK , BOARD		CJJ4M056W		
	JK22	9436430084905	JACK , DIN 9P		CJS6V001Z		
	JK31	90M-YT004860R	JACK , STEREO		CJJ2D008Z		
	JK32	90M-YT003120R	JACK , IN/OUT		CJJ4N036Z		
	JK81	9436430013205	JACK , USB STRAIGHT(BLACK)		CJJ9X006Z		
	JK90	00D9430159904	JACK , 9P D-SUB FEMALE(RS-232C, SEMCO)		CJJ9W001Z		
	JK91	9436440121705	JACK, USB_B TYPE		CJJ9L020Z		*
	JK92	2620100040055	MODULE , OPTICAL (RX, 25Mb/s, 3.3V)		CJSTORX147LFTJ		
	JK93	9436460008405	JACK , BOARD		CJJ4M056W		
	L1	nsp	COIL , SMD POWER (10UH/3A)		CLQ12E100MRZ		
	L201	00D2318063009	PULSE TRANS		CLU9S007Z		
	L202	nsp	FERRITE CORE		CLZ9Z014Z		
	L203	nsp	FERRITE , CHIP BEAD(220ohm, 2012)		CLZ9R006Z		
	L204	nsp	COIL , SMD POWER (22UH/3A)		CLQ13E220MRZ		
	L301,302	nsp	FERRITE , CHIP BEAD(220ohm, 2012)	N	CLZ9R006Z		
	L303,304	nsp	FERRITE , CHIP BEAD(60ohm, 2012)	N	CLZ9R001Z		
	L308,309	nsp	RES , CHIP , 0 OHM, 5% , 1/8W , 2012		CRJ18AJ0R0T		
	L405	nsp	COIL , SMD POWER (10UH/3A)		CLQ12E100MRZ		
	L801,802	nsp	FERRITE , CHIP BEAD(60ohm, 2012)		CLZ9R001Z		
	L901	nsp	COIL , SMD POWER (22UH/3A)		CLQ13E220MRZ		
	L904	nsp	FERRITE , CHIP BEAD(60ohm, 4516)		CLZ9Z014Z		
	L921	nsp	COIL , CHOKE(22uH)		CLZ9Z074Z		

	Ref. No.	Part No.	Part Name	Remarks		Q'ty	New
⚠	LF91,92	943149003340S	LINE FILTER(10MH)		CLZ9Z086Z		
	PC91	90M-HW100710R	I.C , PHOTO COUPLER		HVIPC17L1CB		
	RC81	00MHW10004210	SENSOR , REMOCON		CRVRPM6936V4		
⚠	RY91	943682004660S	RELAY , POWER		CSL1E002ZE		
	S601	00D2120486007	EC12E24204A8		CSR2A051Z		
	S802-812	90M-SP001210R	SW , TACT		CST1A012ZT		
	SC31	nsp	BRACKET , SHIELD		CMD1A512		
	SW81	90M-SP001210R	SW , TACT		CST1A012ZT		
⚠	TF91	943102011250S	TRANS , SWITCHING (EE1625, M-CR603)		CLT9Z064ZE		
⚠	TH91	90M-HH000110R	NTC , THERMISTOR (10MM PITCH)		KRT5D15MSFC		
	TX21	263010017004S	TOTX147L(25M,F,T,J)		CJSTOTX147LFTJ		
⚠	VT91	943251003480S	VARISTOR		CRVSVC471D14A		
	X201	HOX12288E320TF	CRYSTAL, 12.288MHz, HC-49/S, 22pF, 20PPM, 15ohm		HOX12288E220TFB		
	X202	00D3990887903	CSTCE16MOV53-R0 +2125		COXCSTCE16M0V51		
	X501	00D3991054900	FCX-03(20.815MHz)		COX20815I060SD		
	X802	00D3990887903	CSTCE16MOV53-R0 +2125		COXCSTCE16M0V51		
	X901	00D3991041007	X-TAL(12MHZ)		COX12000E200TF		
		nsp	COVER, SHIED OLED		CMC1A405		
		nsp	HOLDER, OLED		CMH1A309		
		nsp	A-ROHS/LABEL,SERIAL		CQB1D022		
		nsp	TUBE , UL		C4B120122		

ETHER NET PCB ASS'Y

	Ref. No.	Part No.	Part Name	Remarks		Q'ty	New
SEMICONDUCTORS GROUP							
	U0101	nsp	POLY SWITCH (1.6A, 8V)		CBA5H1600PSUYT		
	U0103	nsp	IC , DCDC Converter (3.5A, SOP8) SANKEN		CVISI8005QTL		
	U0104	nsp	REGULATOR (SHARP)		HVIPQ012FZ01ZP		
	U105	nsp	I.C , REGULATOR (3.3V, DPAK-5)		CVIKIA78R033F		
	U3900	nsp	Network Media processor		CVIDM860		
	U3901	nsp	1G NAND Flash		CVINAND01GW3B2CN6E		
	U3902	nsp	IC, SDRAM (4M x 16Bit x 4Banks, 166Mhz, DRAM)		CVIM12L2561616A6TG2K		
	U4201	nsp	Pulse-Trans (HIGH SPEED LAN MAGNETICS)		CVIS558-5999U7F		
	U4202	nsp	I.C, ETHERNET PHY		CVILAN8700CAEZGTR		
	U4204	nsp	I.C , IPOD AUTHENTICATION CHIP FROM MARANTZ		CVI236710076509S-DM		
	D0101	nsp	DIODE , ZENER (CHIP,7.5V)		HVDUDZS7.5BSR		
	D0102	nsp	DIODE , SCHOTTKY (40V,3A, DO-214AC) DELTA		CVDSS34SR		
	D0103-0105	nsp	DIODE , CHIP		CVDKDS160RTKP		
	Q0101	nsp	MOSFET (P-CH, 2.5V POWER TRENCH)		CVTFDC608PZ		
	Q0102	nsp	T.R , CHIP , SOT-23		HVTKRC102S		
	Q0103	nsp	T.R , CHIP , SOT-23		HVTKRC104S		
	Q0104	nsp	T.R , CHIP , SOT-23		CVTKRC104S		
	Q0105	nsp	T.R , CHIP , SOT-23		HVTKRC102S		
	Q3900	nsp	T.R , CHIP , SOT-23		HVTKRA102S		
	Q3901	nsp	T.R , CHIP , SOT-23		HVTKRC102S		
	Q4203	nsp	T.R , CHIP , SOT-23		HVTKRC102S		
CAPACITORS GROUP							
	C0101	nsp	CAP , CHIP (1608, 50V/1000pF)		CCUS1H102KC		
	C0102	nsp	CAP , CHIP (1608, 50V/0.01uF)		CCUS1H103KC		
	C0103	nsp	CAP , CHIP (1608, 50V/0.1uF)		CCUS1H104KC		
	C0104	nsp	CAP , CHIP (1005, 25V/0.01uF)		CCUI1E103KC		
	C0105	nsp	CAP , CHIP (1005, 10V/0.1uF)		CCUI1A104KC		
	C0106	nsp	CAP , CHIP ELECT(220UF/6.3V)		HCEC0JRV2221T		
	C0107	nsp	CAP , CHIP (1608, 50V/0.1uF)		CCUS1H104KC		
	C0108	nsp	CAP , CHIP (1608, 10V/1uF)		CCUS1A105KC		
	C0112	nsp	CAP , CHIP (1608, 50V/1000pF)		CCUS1H102KC		
	C0113	nsp	CAP , CHIP (1608, 50V/0.01uF)		CCUS1H103KC		
	C0114	nsp	CAP , CHIP (1608, 50V/1000pF)		CCUS1H102KC		
	C0115	nsp	CAP , CHIP (1005, 16V/0.1uF)		CCUI1C104KC		
	C0116	nsp	CAP , CHIP (1608, 50V/0.01uF)		CCUS1H103KC		
	C0117	nsp	CAP , CHIP (1005, 50V/0.01uF)		CCUI1H103KC		
	C0118	nsp	CAP , CHIP (1005, 50V/1000pF)		CCUI1H102KC		
	C0119,0120	nsp	CAP , CHIP (1005, 10V/0.1uF)		CCUI1A104KC		
	C0121	nsp	CAP , CHIP (1608, 50V/1000pF)		CCUS1H102KC		
	C0122	nsp	CAP , CHIP (1608, 50V/0.1uF)		CCUS1H104KC		
	C0123	nsp	CAP , CHIP ELECT		HCEC0JRV2101T		
	C0124	nsp	CAP , CHIP (1608, 50V/180pF)		CCUS1H181JA		
	C0125	nsp	CAP , CHIP (1005, 16V/0.1uF)		CCUI1C104KC		
	C0126	nsp	CAP , CHIP (1608, 50V/0.1uF)		CCUS1H104KC		

	Ref. No.	Part No.	Part Name	Remarks		Q'ty	New
	C0127	nsp	CAP , CHIP (1608, 50V/1000pF)		CCUS1H102KC		
	C0128	nsp	CAP , CHIP (1608, 50V/0.01uF)		CCUS1H103KC		
	C0129	nsp	CAP, ELECT, SMD, 220UF/35V, RV2		CCEC1VRV2221T		
	C0130	nsp	CAP , CHIP ELECT		HCEC0JRV2101T		
	C0131,0132	nsp	CAP , CHIP (1608, 50V/0.1uF)		CCUS1H104KC		
	C0133	nsp	CAP , CHIP ELECT		HCEC0JRV2101T		
	C0134	nsp	CAP , CHIP ELECT		HCEC1CRV2220T		
	C0135	nsp	CAP , CHIP (1608, 50V/1000pF)		CCUS1H102KC		
	C0136	nsp	CAP , CHIP (10UF/6.3V K X5R 2012)		CCUC0J106KC		
	C0137	nsp	CAP , CHIP (1608, 50V/100pF)		CCUS1H101JA		
	C0139	nsp	CAP , CHIP ELECT		HCEC0JRV2101T		
	C0141	nsp	CAP , CHIP ELECT		HCEC0JRV2101T		
	C0142,0143	nsp	CAP , CHIP (1608, 50V/0.1uF)		CCUS1H104KC		
	C0144,0145	nsp	CAP , CHIP (1608, 50V/1000pF)		CCUS1H102KC		
	C0146,0147	nsp	CAP , CHIP (3225, 16V/47uF)		CCUR1C476KC		
	C0148,0149	nsp	CAP, CHIP (4.7uF/6.3V, 1608, MURATA GRM18)		CCUS0J475KC		
	C0150	nsp	CAP, ELECT, SMD, 100UF/35V, RV2		CCEC1VRV2101T		
	C3900	nsp	CAP , CHIP (1005, 50V/1000pF)		CCUI1H102KC		
	C3901,3902	nsp	CAP , CHIP (1005, 50V/12pF)		CCUI1H120JA		
	C3904-3907	nsp	CAP, CHIP (4.7uF/6.3V, 1608, MURATA GRM18)		CCUS0J475KC		
	C3908-3918	nsp	CAP , CHIP (1005, 10V/0.1uF)		CCUI1A104KC		
	C3923	nsp	CAP, CHIP (4.7uF/6.3V, 1608, MURATA GRM18)		CCUS0J475KC		
	C3926-3929	nsp	CAP, CHIP (4.7uF/6.3V, 1608, MURATA GRM18)		CCUS0J475KC		
	C3930-3939	nsp	CAP , CHIP (1005, 10V/0.1uF)		CCUI1A104KC		
	C3944	nsp	CAP, CHIP (4.7uF/6.3V, 1608, MURATA GRM18)		CCUS0J475KC		
	C3947	nsp	CAP, CHIP (4.7uF/6.3V, 1608, MURATA GRM18)		CCUS0J475KC		
	C3950-3958	nsp	CAP , CHIP (1005, 10V/0.1uF)		CCUI1A104KC		
	C4200	nsp	CAP , CHIP (1005, 50V/1000pF)		CCUI1H102KC		
	C4202	nsp	CAP , CHIP (1608, 50V/0.022uF)		CCUS1H223KC		
	C4203	nsp	CAP , CHIP (1005, 50V/1000pF)		CCUI1H102KC		
	C4204	nsp	CAP, CHIP (4.7uF/6.3V, 1608, MURATA GRM18)		CCUS0J475KC		
	C4205	nsp	CAP , CHIP (1005, 50V/1000pF)		CCUI1H102KC		
	C4206	nsp	CAP, CHIP (4.7uF/6.3V, 1608, MURATA GRM18)		CCUS0J475KC		
	C4209	nsp	CAP , CHIP (1005, 50V/1000pF)		CCUI1H102KC		
	C4210,4211	nsp	CAP , CHIP (1005, 10V/0.1uF)		CCUI1A104KC		
	C4213	nsp	CAP, CHIP (4.7uF/6.3V, 1608, MURATA GRM18)		CCUS0J475KC		
	C4215,4216	nsp	CAP, CHIP (4.7uF/6.3V, 1608, MURATA GRM18)		CCUS0J475KC		
	C4218	nsp	CAP, CHIP (4.7uF/6.3V, 1608, MURATA GRM18)		CCUS0J475KC		
	C4219-4221	nsp	CAP , CHIP (1005, 10V/0.1uF)		CCUI1A104KC		
	C4225	nsp	CAP , CHIP (1608, 50V/1000pF)		CCUS1H102KC		
	C4226	nsp	CAP, CHIP (4.7uF/6.3V, 1608, MURATA GRM18)		CCUS0J475KC		
	C4228	nsp	CAP , CHIP (1005, 10V/0.1uF)		CCUI1A104KC		
	C4229	nsp	CAP , CHIP (1608, 50V/0.01uF)		CCUS1H103KC		
	C4230	nsp	CAP , CHIP (1608, 50V/0.1uF)		CCUS1H104KC		
	C4231-4233	nsp	RES , CHIP(0 OHM , 5% , 1608)		CRJ10DJ0R0T		
	C4234	nsp	CAP , CHIP (1608, 50V/1000pF)		CCUS1H102KC		
	C4235	nsp	CAP , CHIP (1608, 50V/0.01uF)		CCUS1H103KC		
	C4236	nsp	CAP , CHIP (1608, 50V/0.1uF)		CCUS1H104KC		
	C4237	nsp	CAP , CHIP (1608, 50V/1000pF)		CCUS1H102KC		
	C4238	nsp	CAP , CHIP (1608, 50V/0.01uF)		CCUS1H103KC		
	C4239	nsp	CAP , CHIP (1608, 50V/0.1uF)		CCUS1H104KC		
	C4242	nsp	CAP , CHIP (1608, 50V/1000pF)		CCUS1H102KC		

	Ref. No.	Part No.	Part Name	Remarks		Q'ty	New
	C4243	nsp	CAP , CHIP (1608, 50V/0.01uF)		CCUS1H103KC		
	C4244-4246	nsp	CAP , CHIP (1608, 50V/0.1uF)		CCUS1H104KC		
RESISTORS GROUP							
	R0113	nsp	RES, CHIP 3.9KOHM/1608/1%		CRJ10DF3901T		
	R0114	nsp	RES , CHIP(1608, 1% , 43K OHM)		CRJ10DF4302T		
	R0115	nsp	RES. CHIP (5.1K 1%)		CRJ10DF5101T		
	R3916	nsp	RES , CHIP(1608, 1% , 3K OHM)		CRJ10DF3001T		
	R3917	nsp	RES , CHIP 1%		CRJ10DF1302T		
	R3918	nsp	RES, CHIP 6.2KOHM/1608/1%		CRJ10DF6201T		
	R4200	nsp	RES, CHIP 1% 75 OHM		CRJ10DF75R0T		
	R4202,4203	nsp	RES, CHIP 1% 75 OHM		CRJ10DF75R0T		
	R4206-4209	nsp	RES , CHIP(1608, 1% , 51 OHM)		CRJ10DF51R0T		
	R4223	nsp	RES, CHIP 6.8KOHM/1608/1%		CRJ10DF6801T		
	R4224	nsp	RES, CHIP 5.6KOHM/1608/1%		CRJ10DF5601T		
OTHER PATRS GROUP							
	L0101	nsp	COIL , SMD POWER (22UH/3A)		CLQ13E220MRZ		
	L3900-3902	nsp	FERRITE , CHIP BEAD(220ohm, 2012)		CLZ9R006Z		
	L4202-4206	nsp	FERRITE , CHIP BEAD(220ohm, 2012)		CLZ9R006Z		
	N0101	nsp	WAFER , SMD (2MM PITCH)		CJP05GA208ZY		
	N0103	nsp	WAFER, 2mm, SMD, Vertical, 8P		CJP08GA208ZY		
	N4200	00D2051333009	RJ45 with LED		CJJ9L019Z		
	N4201	nsp	WAFER , CARD CABLE (SMD, 1MM)		CJP23GA193ZY		
	X3900	nsp	X-tal (SMD, 24Mhz, FCX-05)		COX24000I060SD		
	Z4201,4202	nsp	BRACKET , PCB		CMD1A569		